SWISS TIMING

SWIMMING CONCEPT

Quantum / OSB with footrest

User's Manual

0017.509.02

Version 4.1

Edition March 2014

Caution and safety precautions

- Never use any other charger than the supplied or a type approved by Swiss Timing. This could destroy the battery, cause damage to unit, and possible cause personal injury due to fire or/and electrical shock.
- Never bypass a power cord ground lead by breaking off the ground pin, or by using inappropriate extension cords or adapters.
- Never plug a power cord into the AC power source until you have made sure that all installation, cabling and power levels, are proper, and that the applicable procedures in this manual have been followed.
- Protect the equipment against splashing, rain and excessive sun rays.
- Never use the device if it is damaged or insecure.
- Verify the selection of the power distribution.
- Verify that the voltage quoted on the rating plate is the same as your voltage. Connect the appliance only to power sockets with protective earth. The use of incorrect connection voids warranty.
- This program may be modified at any time without prior notification.
- Do not open the case; there is nothing that needs servicing inside it. Nevertheless, if the case must be opened, you must call for some qualified personnel. The power supply cable must be disconnected before opening the case.
- During the transport of all Swiss Timing equipment delivered with a reusable carry case, the said case should be used at all times. This is imperative to limit the damage, such as shocks or vibration that can be caused to the units during transport.
- The same cases should also be used when returning equipment to Swiss Timing for repair. Swiss Timing reserves the right to refuse all guarantees if this condition is not fulfilled.
- If the installation includes a horn, be sure to maintain a sufficient security distance from the public.

Documentation Updates
Swiss Timing Ltd. reserves the right to make improvements in the products described in this documentation at any time without prior notice. Furthermore, Swiss Timing Ltd. reserves the right to revise this documentation in its content at any time and without any obligation to notify any person or organization of such revision.

Disclaimer
The information provided in this documentation has been obtained from sources believed to be reliable, accurate and current. However, Swiss Timing Ltd. makes no representation or warranty, express or implied, with respect, but not limited to, the completeness, accuracy, correctness and actuality of the content of this documentation. Swiss Timing Ltd. specifically disclaims any implied warranty of merchantability, quality and/or fitness for any particular purpose. Swiss Timing Ltd. shall not be liable for errors contained in this documentation or for incidental or consequential damages in connection with the supply, performance or use of this documentation.

Environment

This symbol indicates that this product should not be disposed with household waste. It has to be returned to a local authorized collection system. By following this procedure you will contribute to the protection of the environment and human health. The recycling of the materials will help to conserve natural resources.

Copyright
© Swiss Timing Ltd..
All rights reserved.
This documentation may not, as a whole or in part, be copied, translated, reproduced, transmitted or reduced and/or stored to any electronic medium or machine-readable form without the prior written consent of Swiss Timing Ltd.

TABLE OF CONTENTS

1 INTRODUCTION 1
1.1 Cable for Timing 1
1.2 Installation with mobile End Walls (Bulkhead) 2
1.3 Introduction 2
1.4 General principle 2

2 TIMING ROOM LAYOUT 3

3 MECHANICAL 6
3.1 Touchpads 6
3.1.1 OCP5 240x90 FINA (Angle bracket mounting) 6
3.1.2 OCP5 240x90 FINA (Direct mounting) 7
3.1.3 OCP5 190x90 (Angle bracket mounting) 8
3.1.4 OCP5 190x90 (Direct mounting) 9
3.1.5 OCP5 150x60 and 200x60 (Gutter wall) 10
3.2 Starting block 11
3.2.1 OSB11 11
3.2.2 OSB14 13
3.2.3 Fix cabling ducts 14
3.2.4 OSB Loudspeaker 15
3.2.5 OSB12 16
3.3 Fix cabling 17
3.3.1 ODB10-SW 17
3.3.2 Deck plate 18
3.3.3 Deckplate adapter 20
3.3.4 Wall socket 21
3.4 Mobile cabling 22
3.4.1 StartTime 22
3.4.2 External loudspeaker 22
3.4.3 Harness 22
3.5 Displays 23
3.5.1 Calypso 23
3.5.2 Piccolo 24

4 GENERAL CABLING 25
4.1 Fix cabling 25
4.1.1 ODB10-SW (PRY) or (PRY & SDY) with 1x cable / deck plate 25
4.1.2 ODB10-SW (PRY & SDY) with 1x cable / deck plate 25

P.O. Box 138, rue de l'Envers 1
2606 Corgémont
Switzerland
Phone +41 32 488 36 11
www.swisstiming.com
info@swisstiming.com

4.1.3 Fixed wiring Swimming Level 1 (Finish PRY) 26
4.1.4 Fixed wiring Swimming Level 2 (Finish PRY / Inter PRY) 27
4.1.5 Fixed wiring Swimming Level 3 (Finish PRY & SDY / Inter PRY)..... 28
4.1.6 Fixed wiring Swimming Level 4 (Finish PRY & SDY / Inter PRY & SDY)..... 29
4.1.7 Loudspeaker cable 30
4.1.8 Start cable 30
4.2 Mobile cabling 31
4.2.1 Mobile Swimming Level 1 (Finish PRY) 31
4.2.2 Mobile Swimming Level 2 (Finish PRY / Inter PRY)..... 32
4.2.3 Mobile Swimming Level 3 (Finish PRY & SDY / Inter PRY) 33
4.2.4 Mobile Swimming Level 4 (Finish PRY & SDY / Inter PRY & SDY) 34
4.3 Displays Wiring..... 35

5 APPENDIX.....36

5.1 Version history..... 36

P.O. Box 138, rue de l'Envers 1
2606 Corgémont
Switzerland

Phone +41 32 488 36 11
www.swisstiming.com
info@swisstiming.com

1 INTRODUCTION

An aquatic timing system can either be laid out with either “mobile” cabling or as an “in-deck” installation. In an “in-deck” installation the cabling to the various components is accomplished using wherever possible conduit, cableways, or cable trays installed in the concrete slab or below deck. This means that the scene of the Start is clear of all of all clutter, in line with FINA recommendations.

http://www.fina.org-

FACILITIES RULES
http://www.fina.org/H2O/index.php?option=com_content&view=category&id=88:facilities-rules&Itemid=184&layout=default

The easiest way to accomplish this is to have a basement “walk around” situation. This allows all the cabling to be off the deck, end wall or bulkhead and permits the installation of the lane speakers inside the starting blocks. This is certainly the preferred configuration, which facilitates a safer, quicker set-up so the system can be more “plug and play” like. Moreover, starting blocks can be easily removed between competitions without modifying the permanent wiring.

This type of configuration also permits the installation of an ODB lane interface in a secure dry location. The advantage of this is that all the swimming lanes are addressed individually over a separate cable to each lane.

There are two ways in which to use back-up system:

1. Semi-Automatic mode, 1, 2 or 3 pushbuttons.

2. Automatic mode, in which case the touchpad and relay platforms are connected in parallel on the primary and secondary systems.
   Note: this requires the use of a back-up high-speed video system and is typically used at very high level meets.

1.1 Cable for Timing

The cables are of the "electric control" type, non-twisted but **shielded**. Stranded conductor cable was chosen for ease of installation and connection. Shielding is a necessary precaution.
Cable recommended type: 6 x 0.5mm^2, Ø ext. 9mm max. (4 x 20 AWG). Swiss Timing Ltd will not warrant the performance of the system if the minimum specifications are not adhered to.

Fig. 8 and 10 offer other variants according to the type of pool and depending on the construction of the Finish wall. It is not always possible to have a water outlet, but where possible this augments reliability of the wiring. The basic deck plate 3274.044 then becomes the set 3274.635 along with its mounting screws and plugs.

1.2 Installation with mobile End Walls (Bulkhead)

1.3 Introduction

Because of the varying size and configurations of bulkhead installations, each individual job requires a unique approach. Please contact your local Omega representative for more information.

1.4 General principle

In an Olympic configuration the swimming competition area could be between 2 moveable bulkheads. In other swimming configurations the pool may be divided in 2-25 meter tanks or configurations for other disciplines.

2 TIMING ROOM LAYOUT

The Timing Control Room is installed in accordance with FINA regulations. If the floor is raised by 30 to 35 cm, operator visibility will be enhanced.

ODB10-SW facilities control of the timing data lines accelerates intervention and commutation on the inputs and outputs, as well as enabling the inclusion of all aquatic disciplines and rapid maintenance.

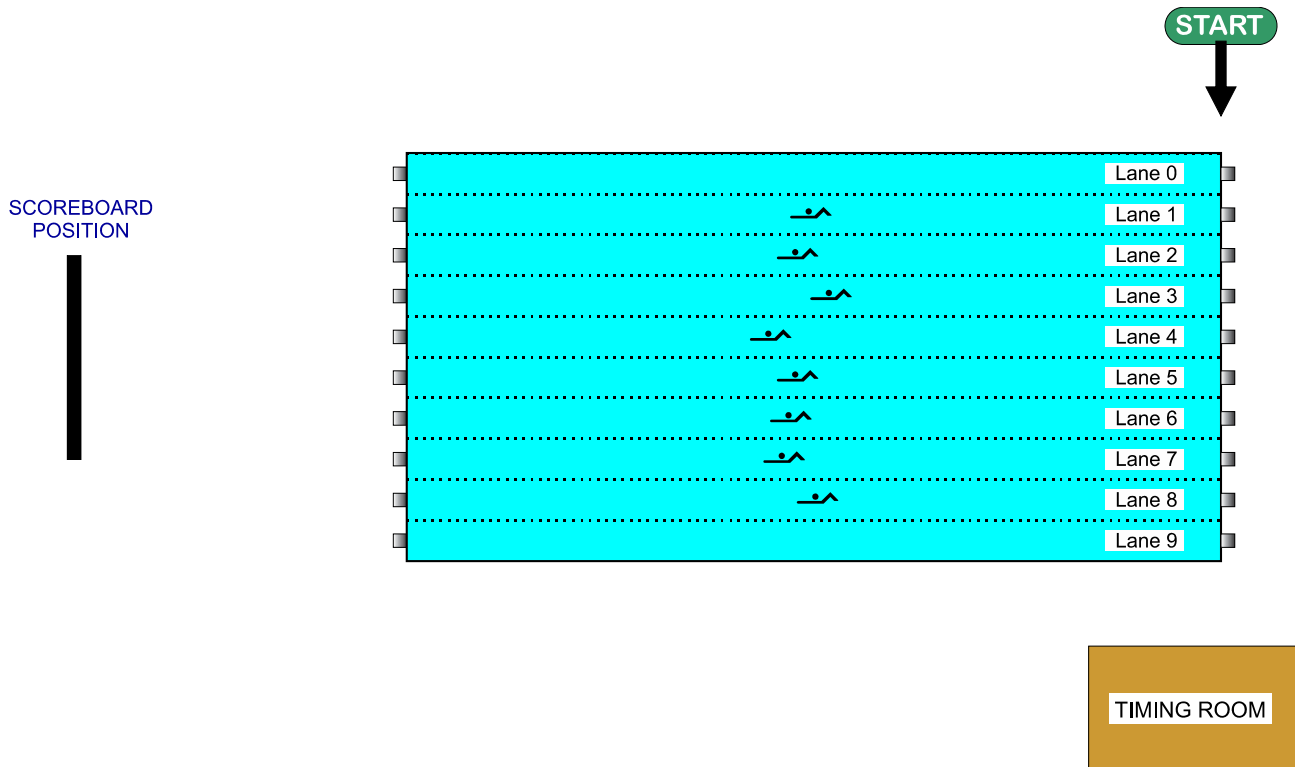

Figure 1 – Timing room position

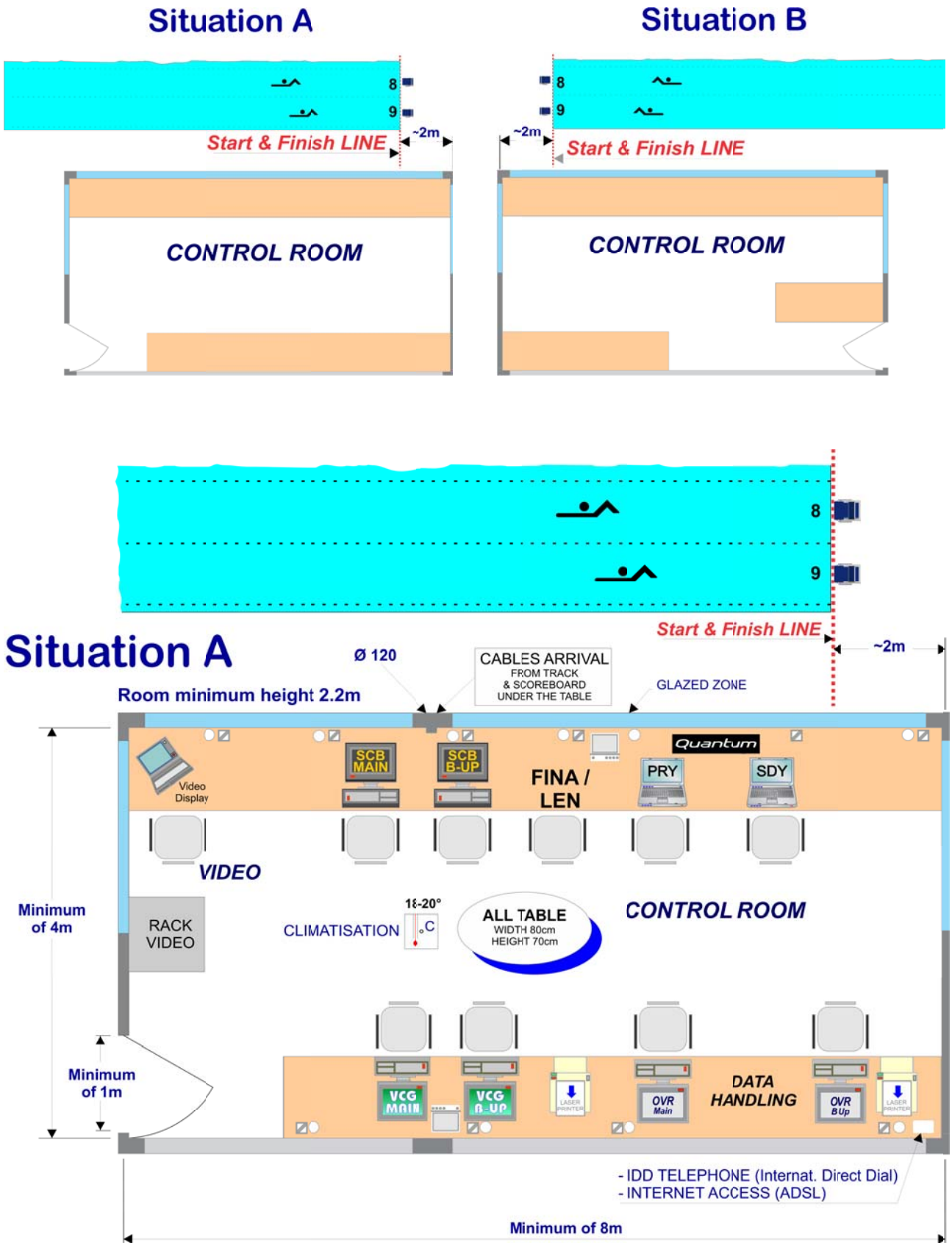

Figures 2 – Timing room layout 1

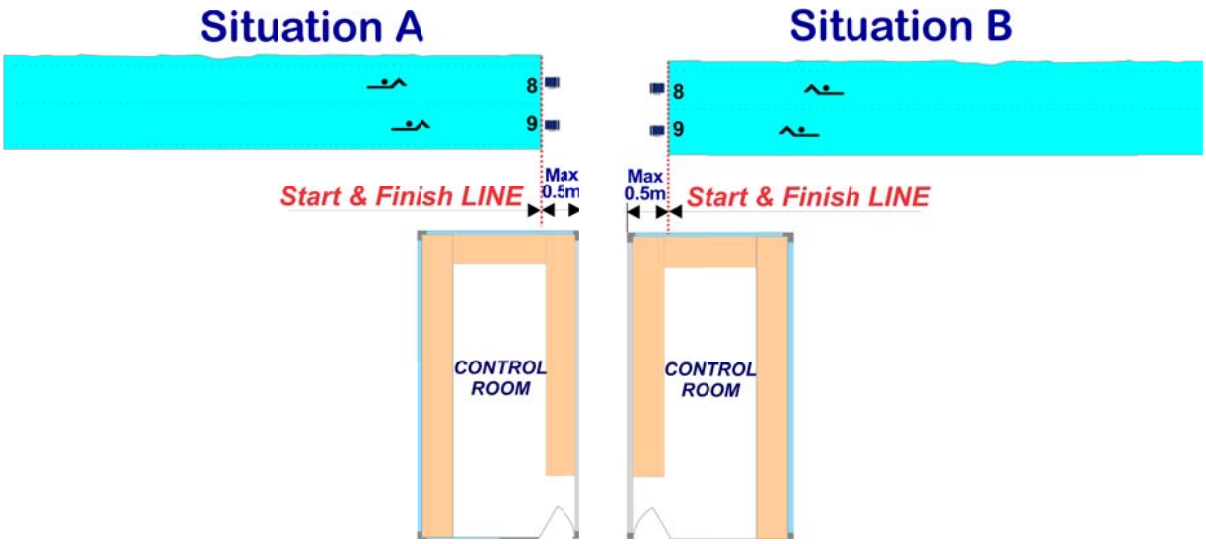

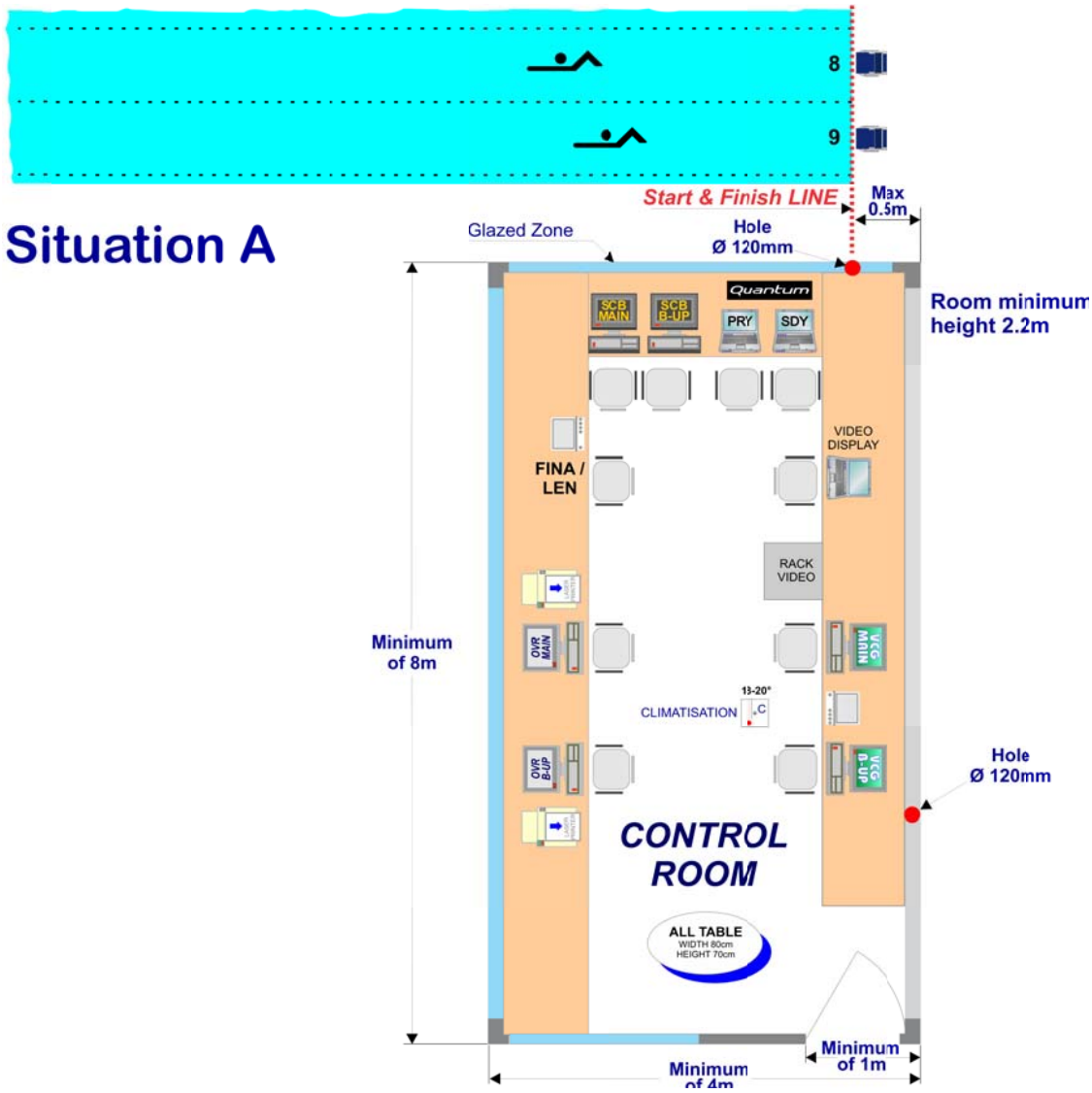

Figures 3 – Timing room layout 2

3 MECHANICAL

3.1 Touchpads

3.1.1 OCP5 240x90 FINA (Angle bracket mounting)

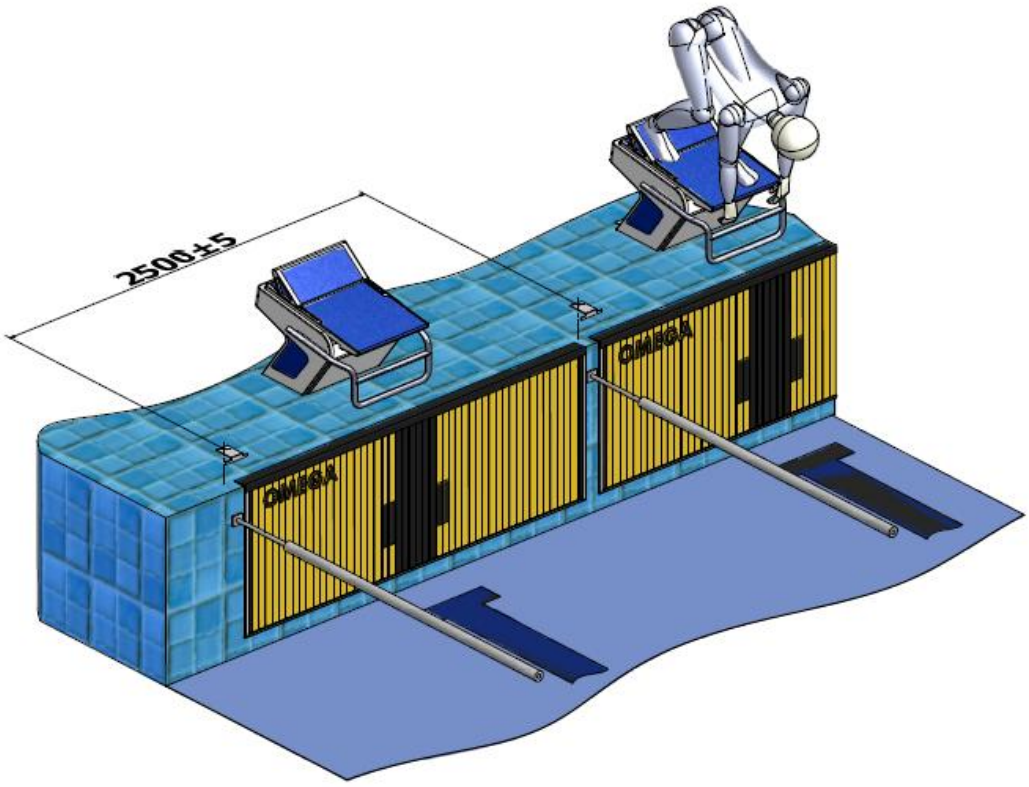

Figures 4 - Touchpad 240x90 / Angle bracket mounting

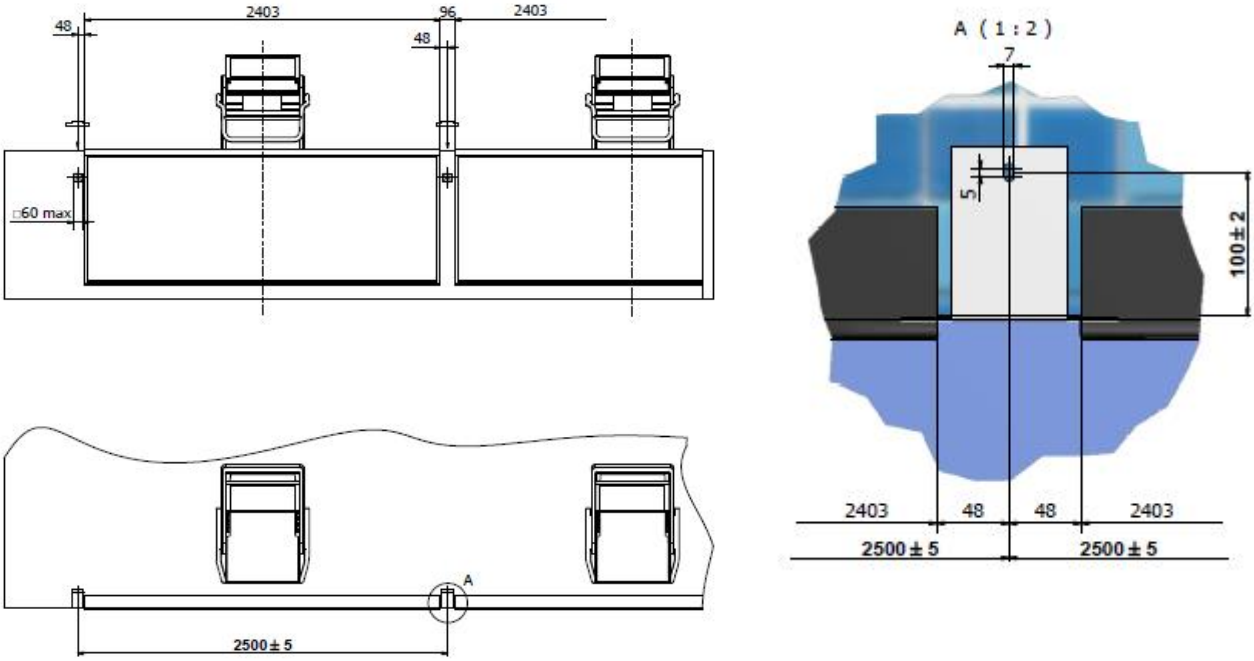

3.1.2 OCP5 240x90 FINA (Direct mounting)

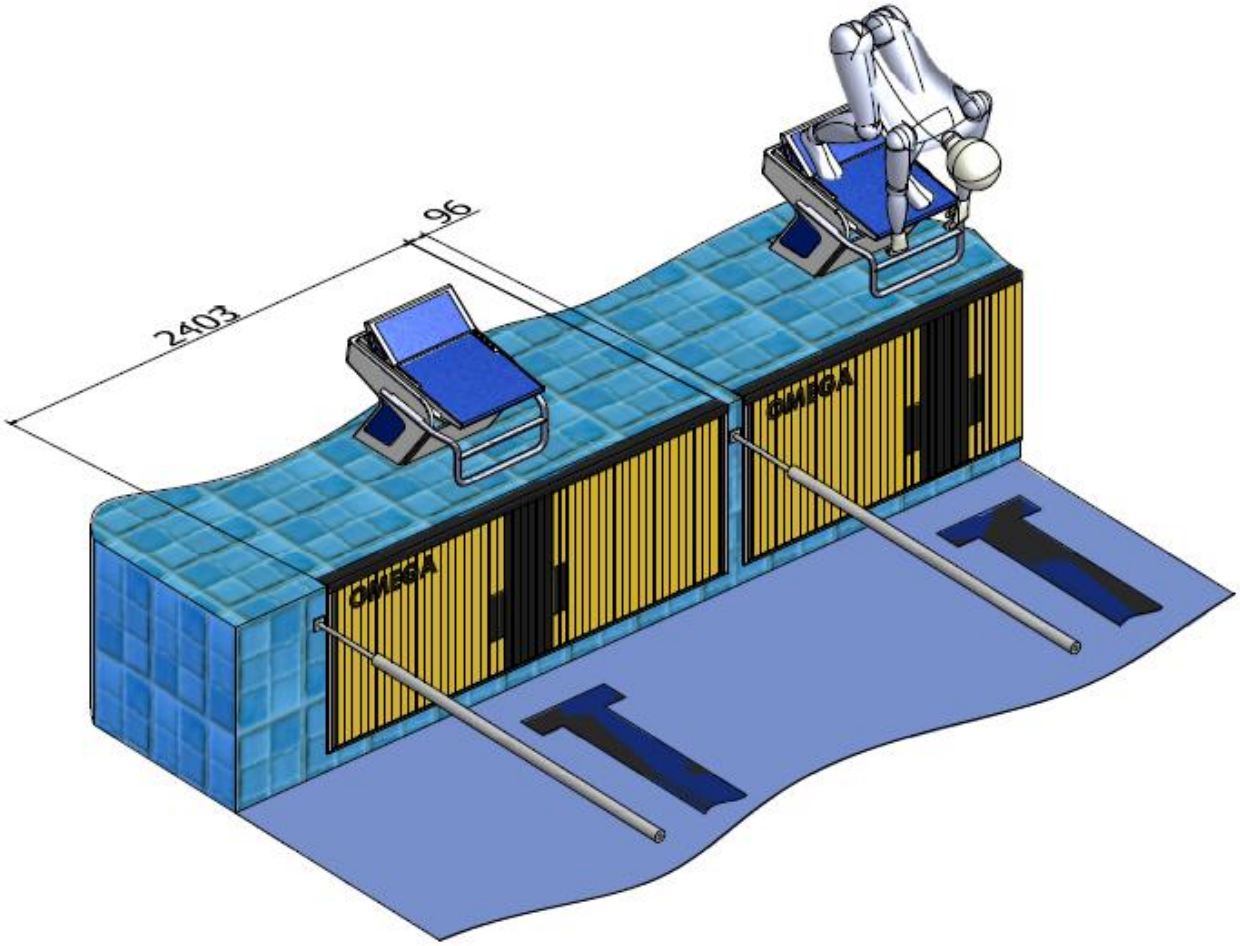

Figures 5 - Touchpad 240x90 / Direct mounting

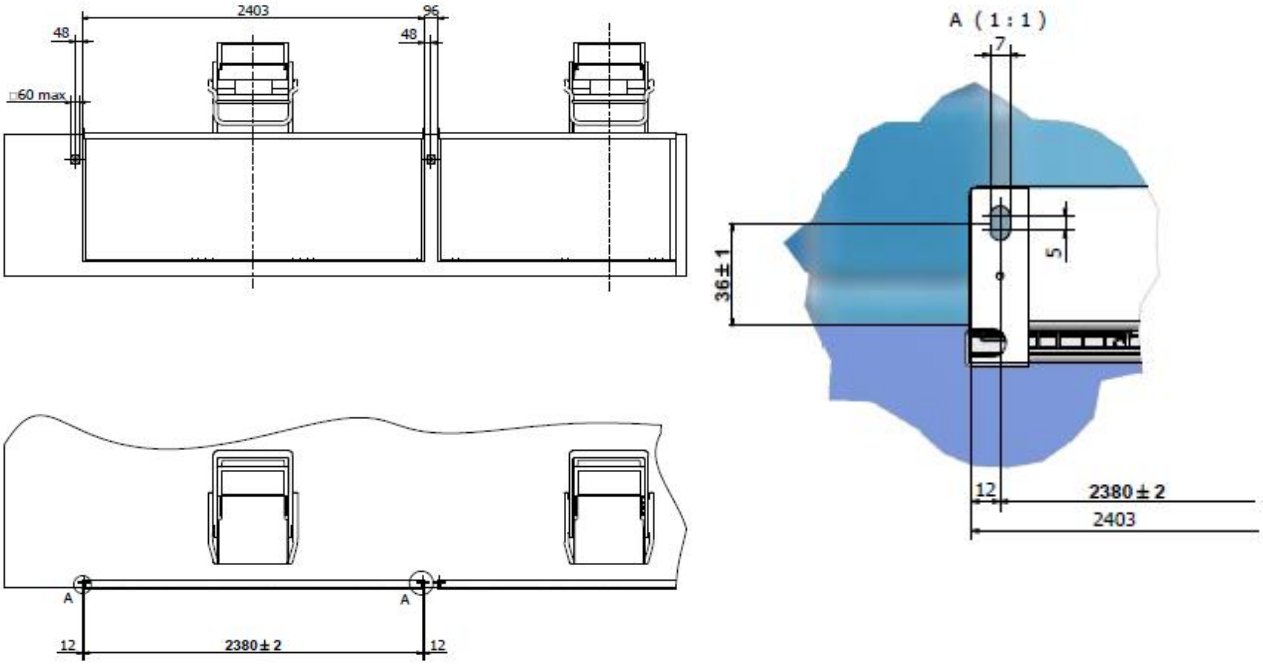

3.1.3 OCP5 190x90 (Angle bracket mounting)

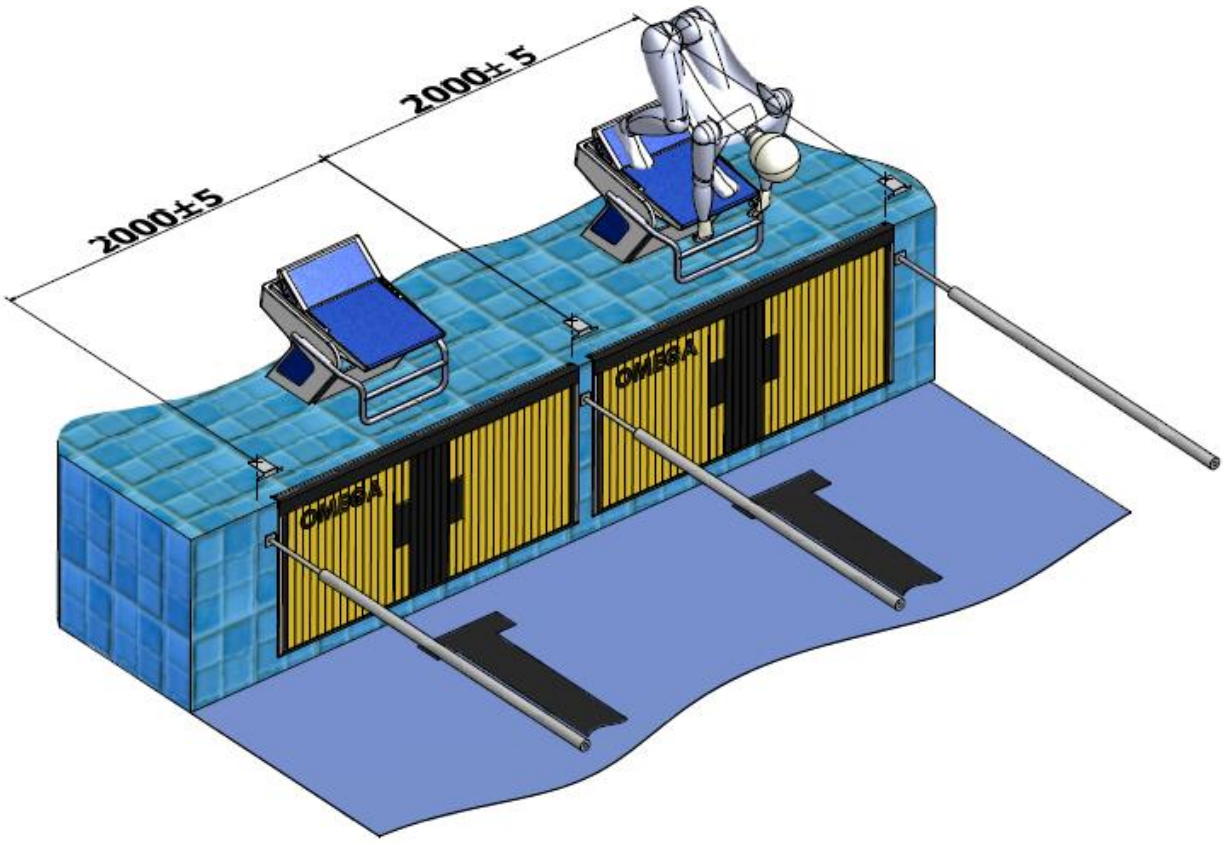

Figures 6 - Touchpad 190x90 / Angle bracket mounting

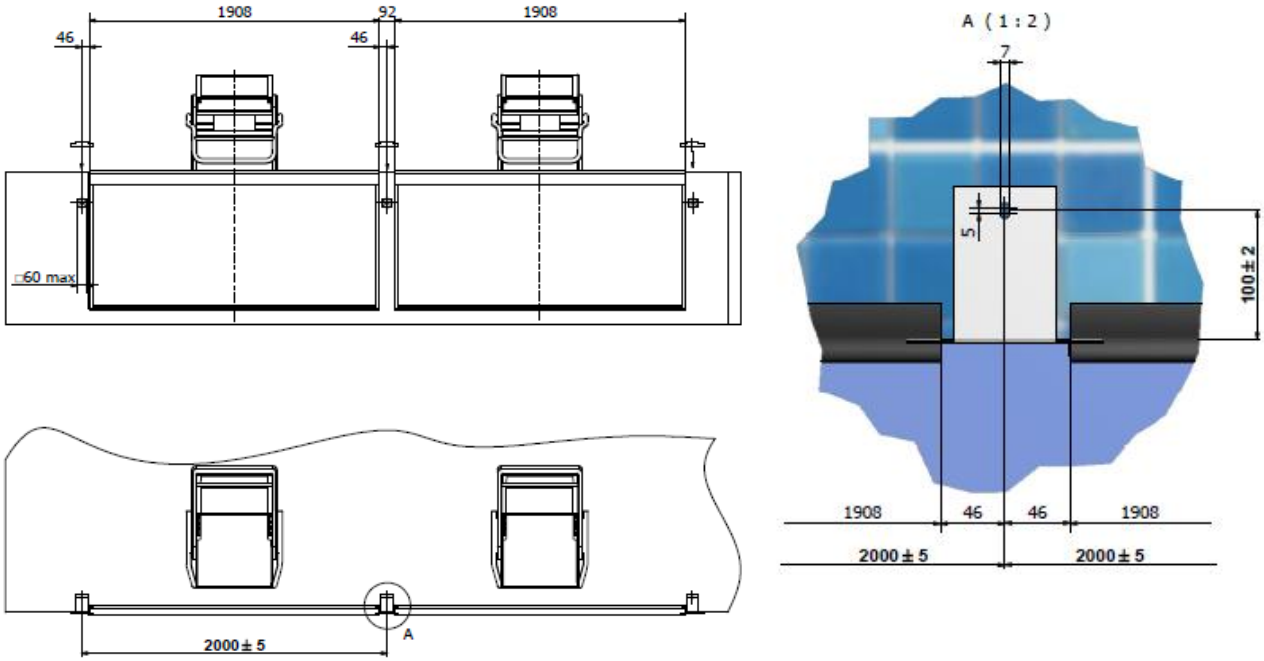

3.1.4 OCP5 190x90 (Direct mounting)

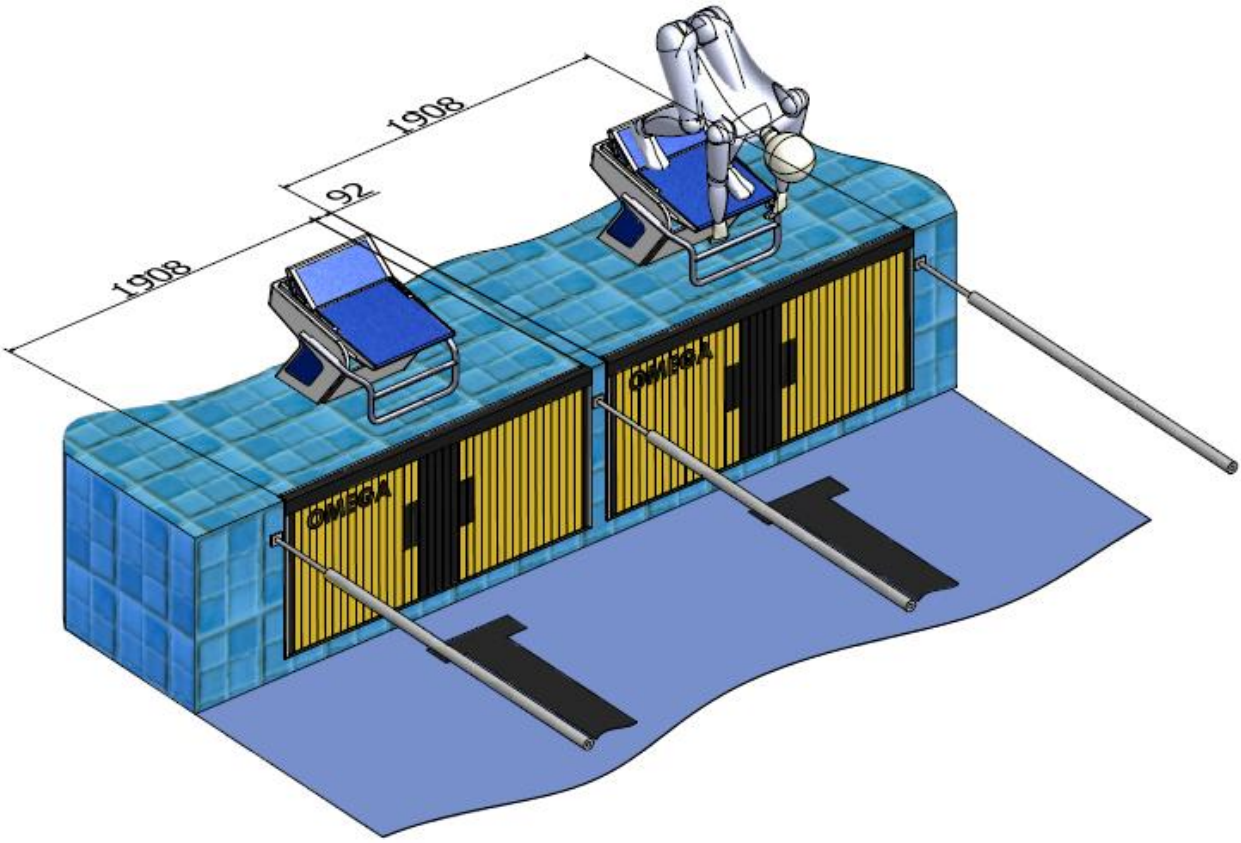

Figures 7 - Touchpad 190x90 / Direct mounting

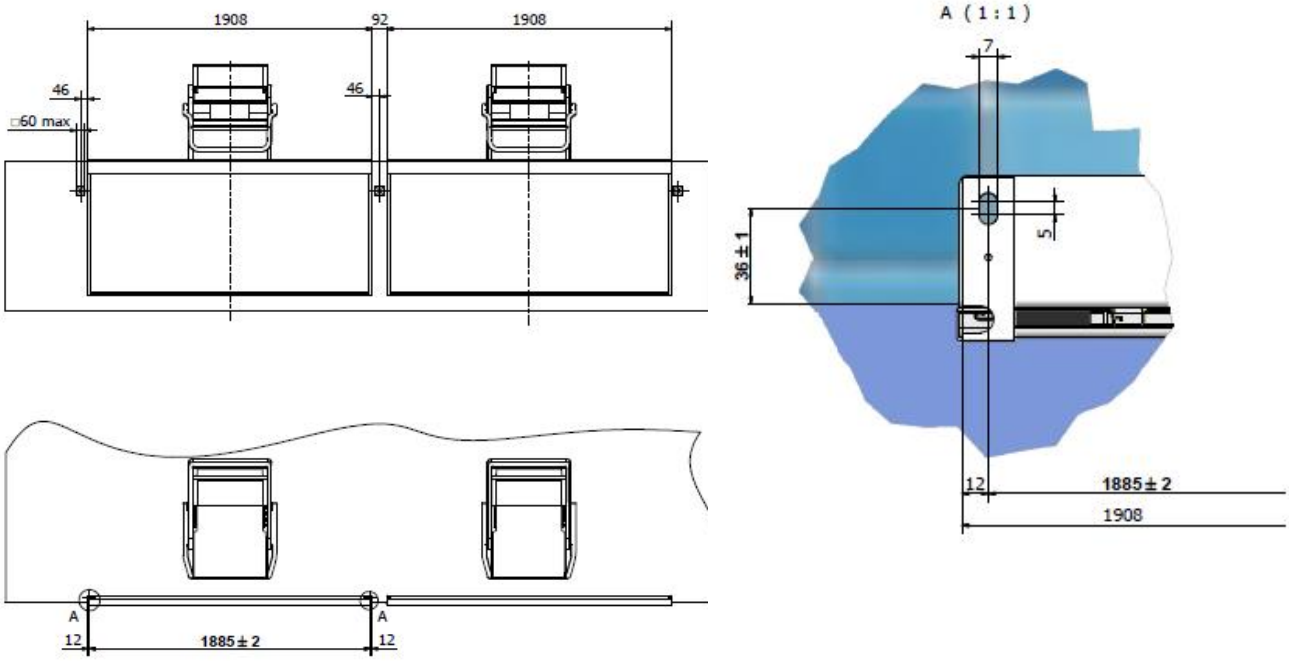

3.1.5 OCP5 150x60 and 200x60 (Gutter wall)

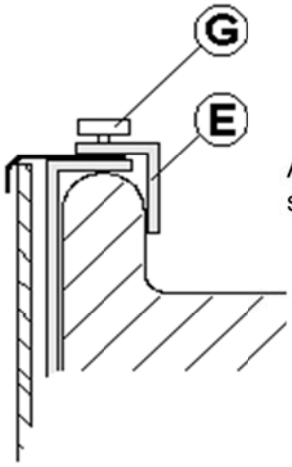

Adjust angle brackets (**E**) according to thickness of gutter wall and tighten special nut (**G**).

Figure 8 - Touchpad 60cm / Gutter mounting

3.2 Starting block

3.2.1 OSB11

See also OSB11 user's manual : 3454.504

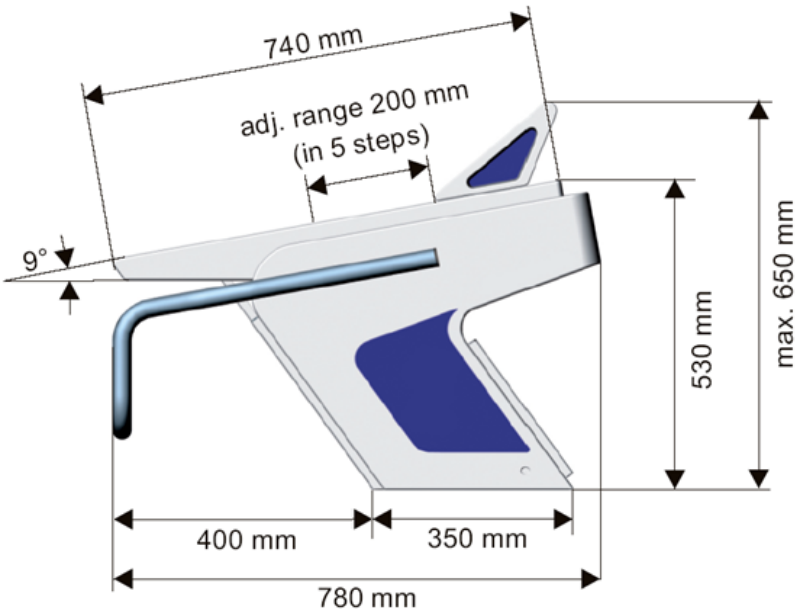

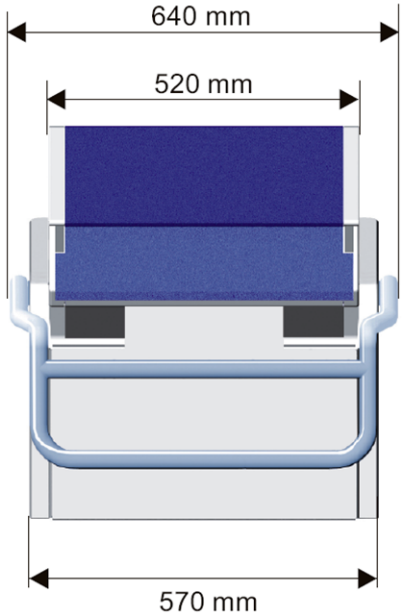

The **OSB11** starting blocks are positioned according to the measures indicated: 400mm from the swimming pool border (410mm with the OCP5 touchpad) to the front of the base.

The handle of the **OSB11** must be aligned with the border of the touchpad (for example OCP5).

Are the touch plates missing or is the swimming pool too small with touchpads, align the **OSB11** starting block with the border of the swimming pool.

The drilling oblong fixations permit a play of the block of +/-10mm; this permits a possible correction of the alignment.

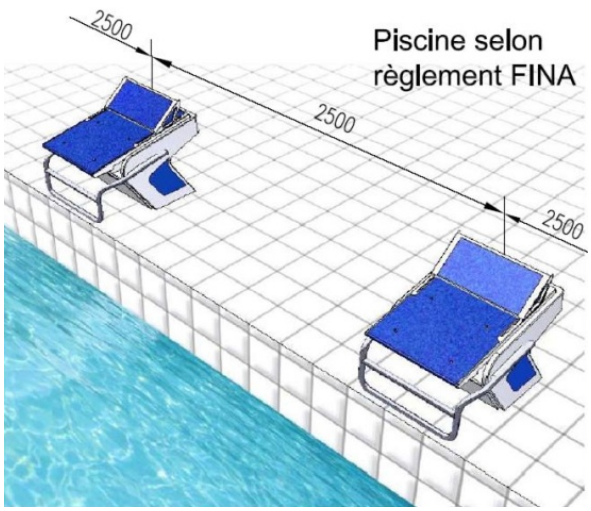

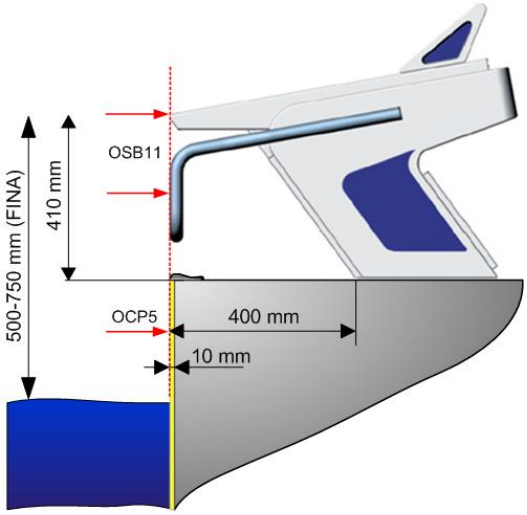

For fix cabling, a hole with Ø120 - 122mm at 570mm away from the pool's border must be foreseen in order to provide space for the cables (the gauge has a hole of Ø120mm).

Put the drilling gauge (1) on the border of the swimming pool and mark the 4 Ø5 holes of the gauge with a Ø5 drill.

Drill the 4 holes respectively with drills ∅5, ∅10 and ∅16mm (2). **Minimal depth: 90mm, maximal depth: 100mm**.

As per instruction manual 3393.505 "Preparing the drillings", push the pegs M8 (3) in the ∅16 holes and put the OSB11 starting block on the 4 fixation points.

Fix the base with the 4 screws M8 x 40 (5) and the 4 washers M8 (4).

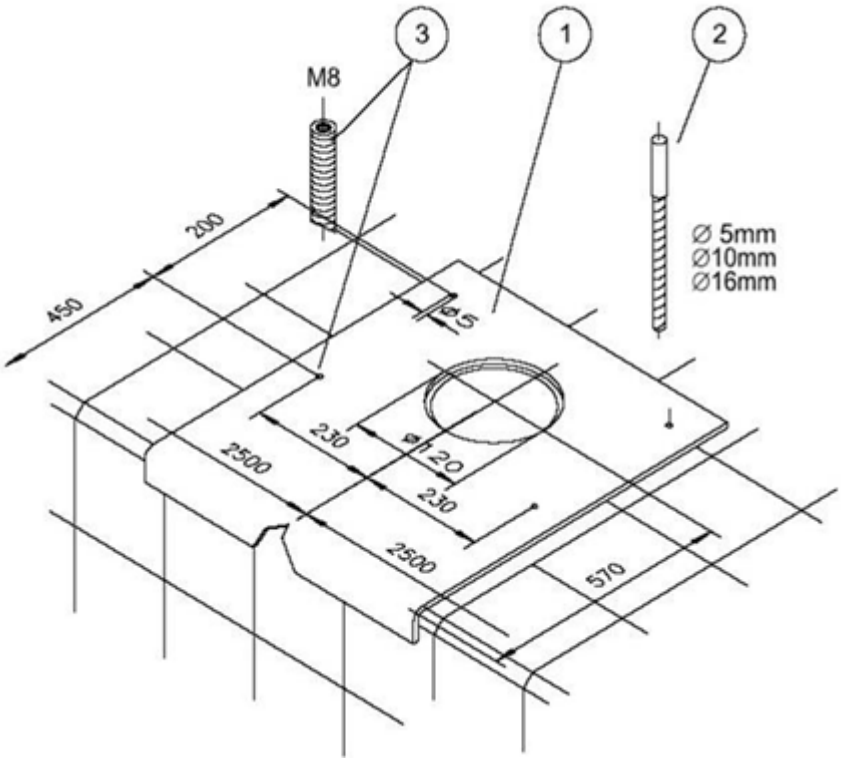

3.2.2 OSB14

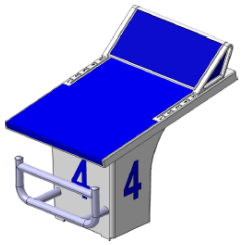

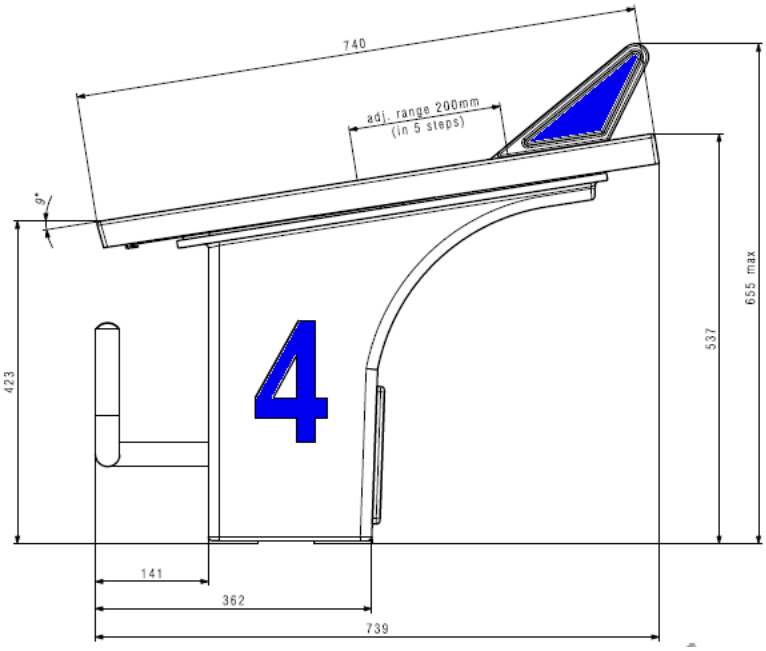
740
adj. range 200mm
(in 5 steps)
9°
423
537
655 max
141
362
739

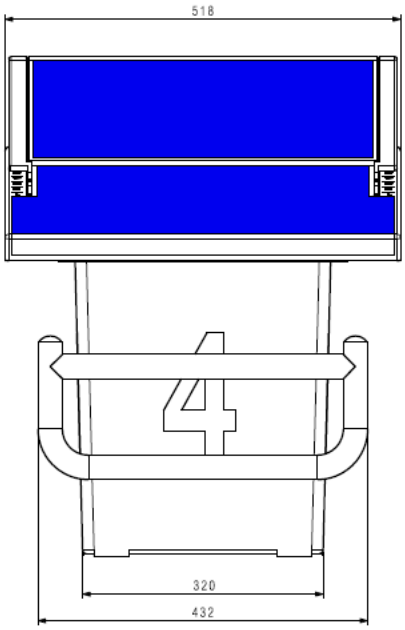
518
320
432

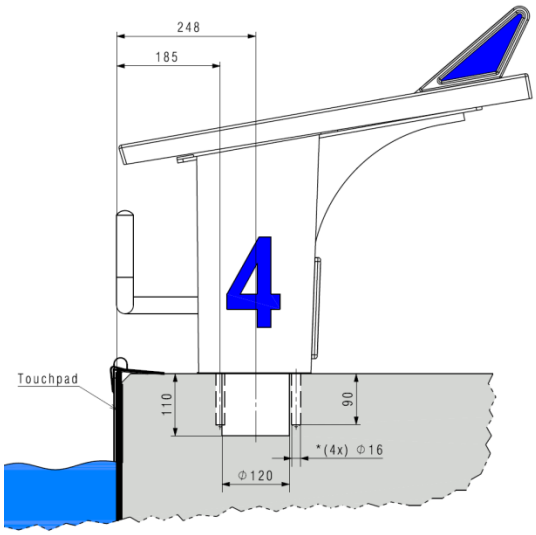
248
185
Touchpad
110
90
*(4x) Φ16
Φ120

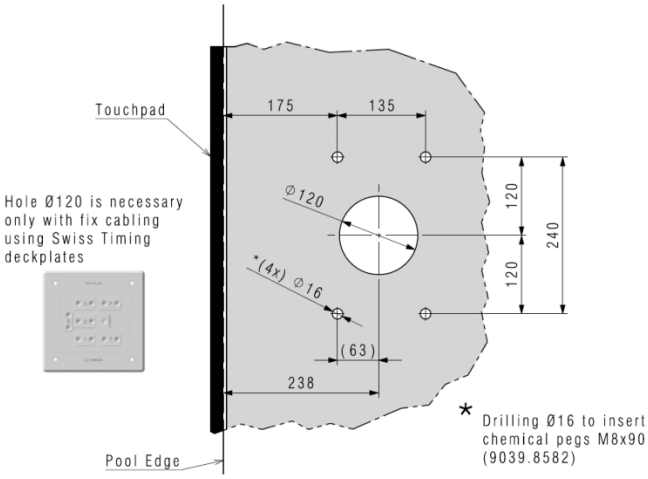
Touchpad
175
135
Hole Ø120 is necessary
only with fix cabling
using Swiss Timing
deckplates
Ø120
*(4x) Ø16
120
120
240
(63)
238
Pool Edge
* Drilling Ø16 to insert
chemical pegs M8x90
(9039.8582)

3.2.3 Fix cabling ducts

Proposal 1

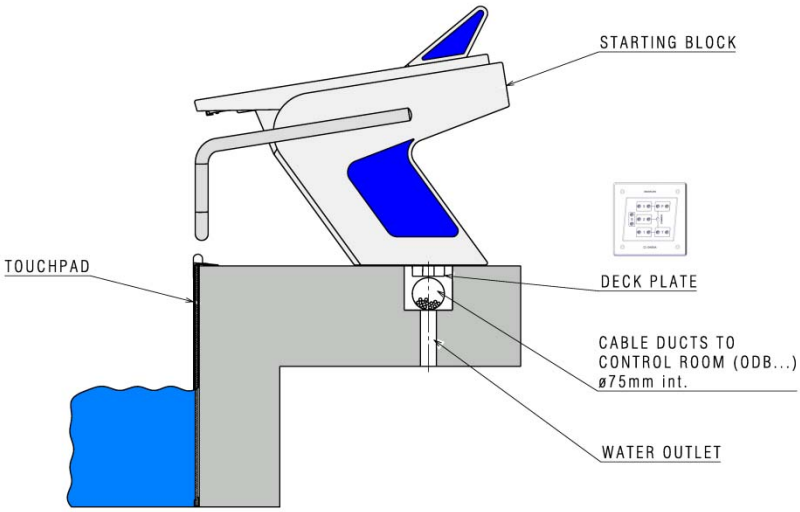

Proposal 2

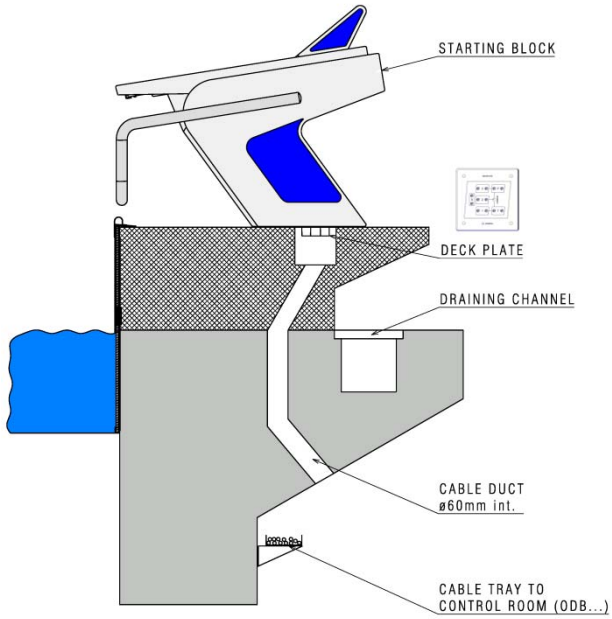

Proposal 3

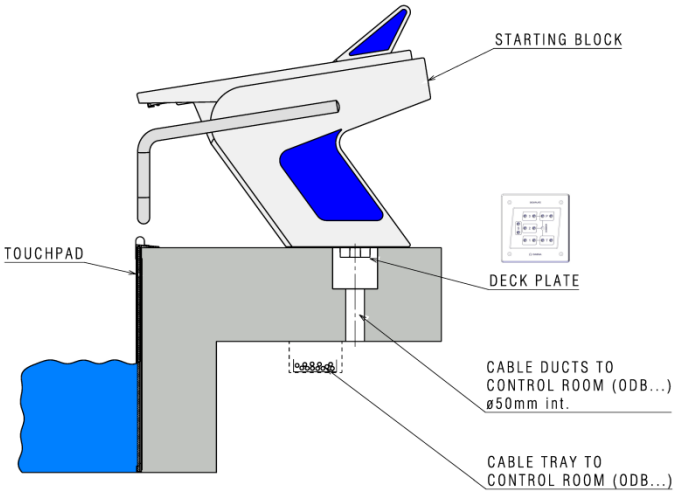

3.2.4 OSB Loudspeaker

Internal loudpeaker is installed inside OSB11 or OSB14.

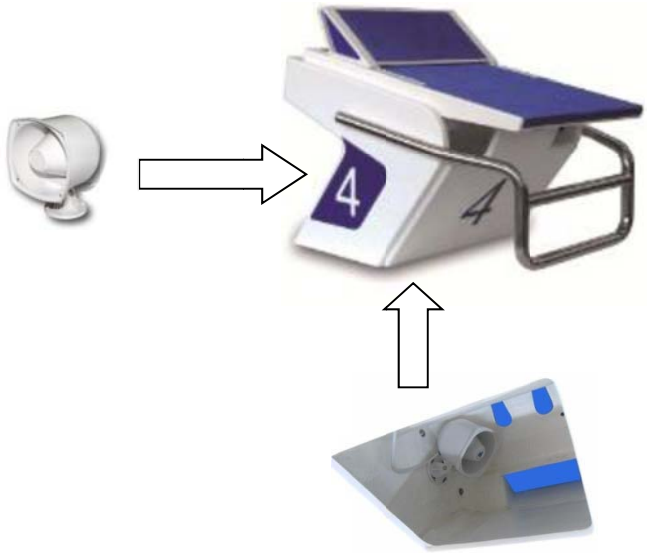

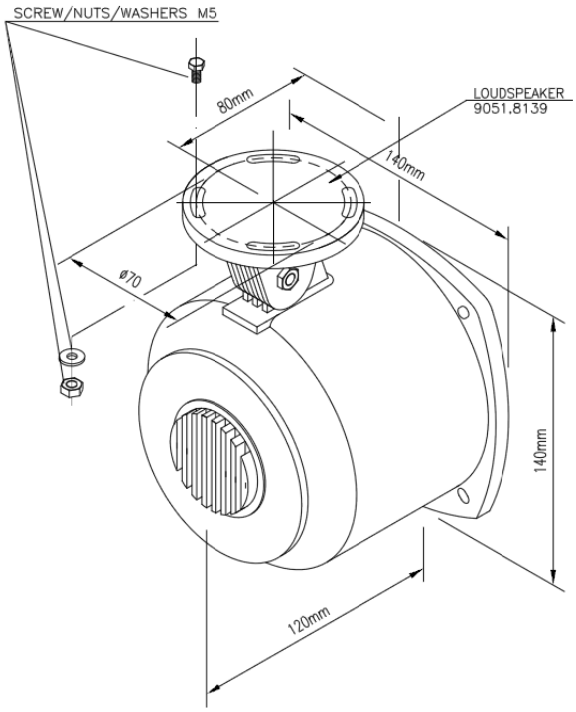

3.2.5 OSB12

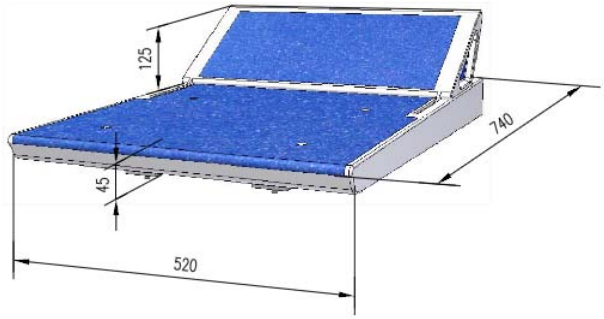
125
740
45
520

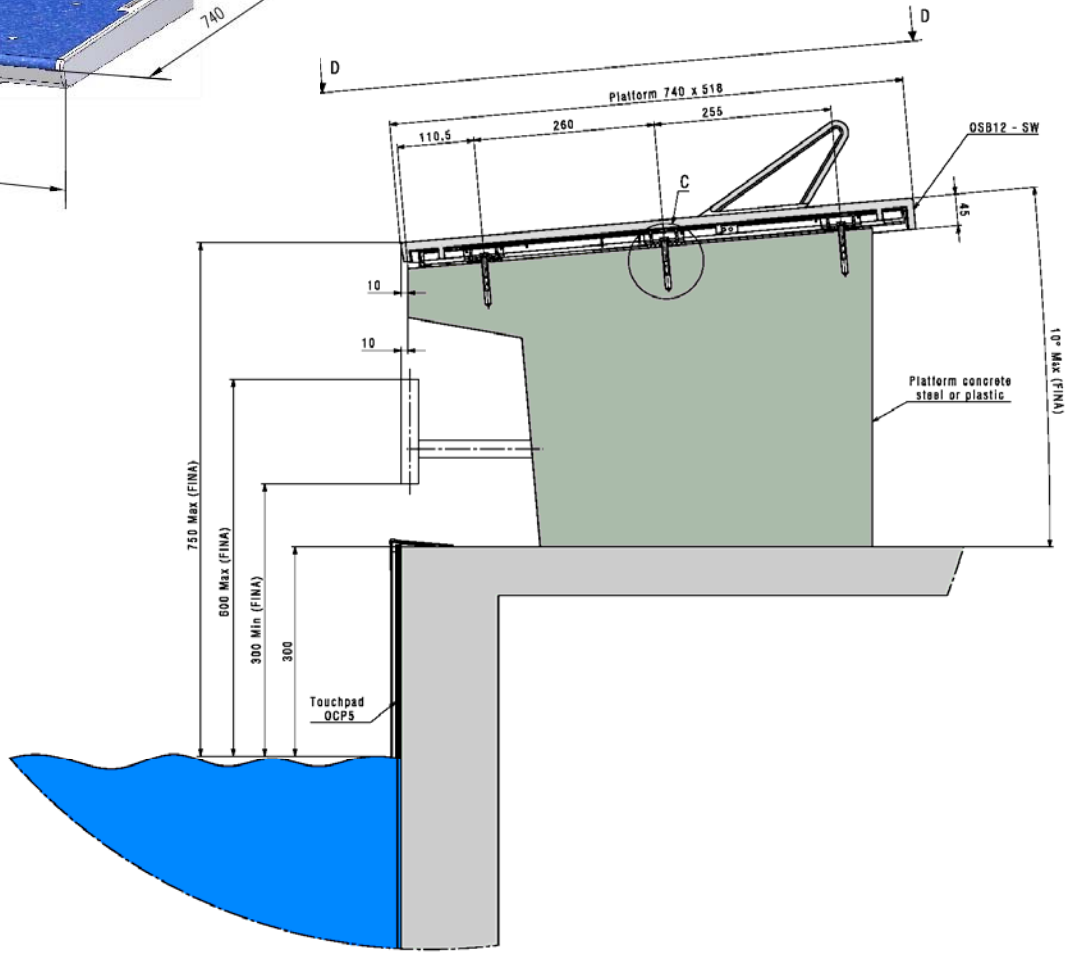
D
D
Platform 740 x 518
110,5
260
255
OSB12 - SW
C
45
10
10
Platform concrete steel or plastic
10° Max (FINA)
750 Max (FINA)
600 Max (FINA)
300 Min (FINA)
300
Touchpad OCP5

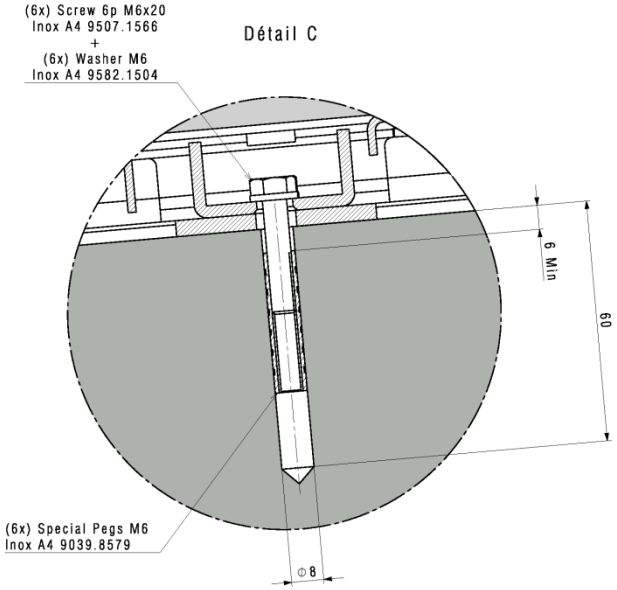
(6x) Screw 6p M6x20
Inox A4 9507.1566
+
(6x) Washer M6
Inox A4 9582.1504
Détail C
6 Min
60
(6x) Special Pegs M6
Inox A4 9039.8579
Φ8

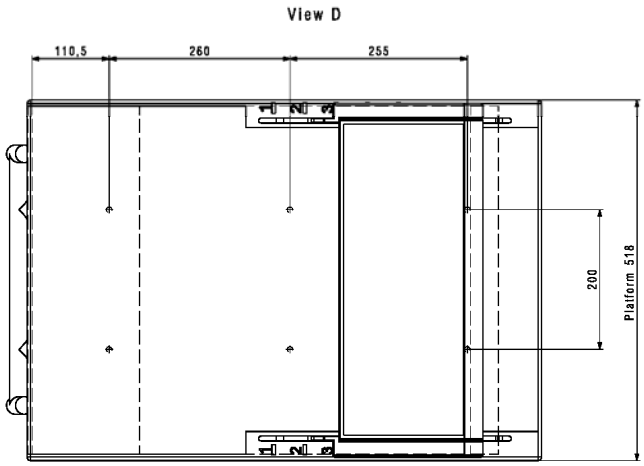
View D
110,5
260
255
200
Platform 518

3.3 Fix cabling

3.3.1 ODB10-SW

External dimensions (mm): Hx195/Wx495/Dx128

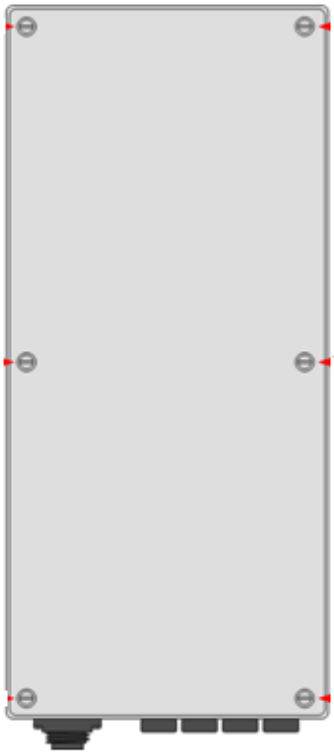

ODB10-SW with cover

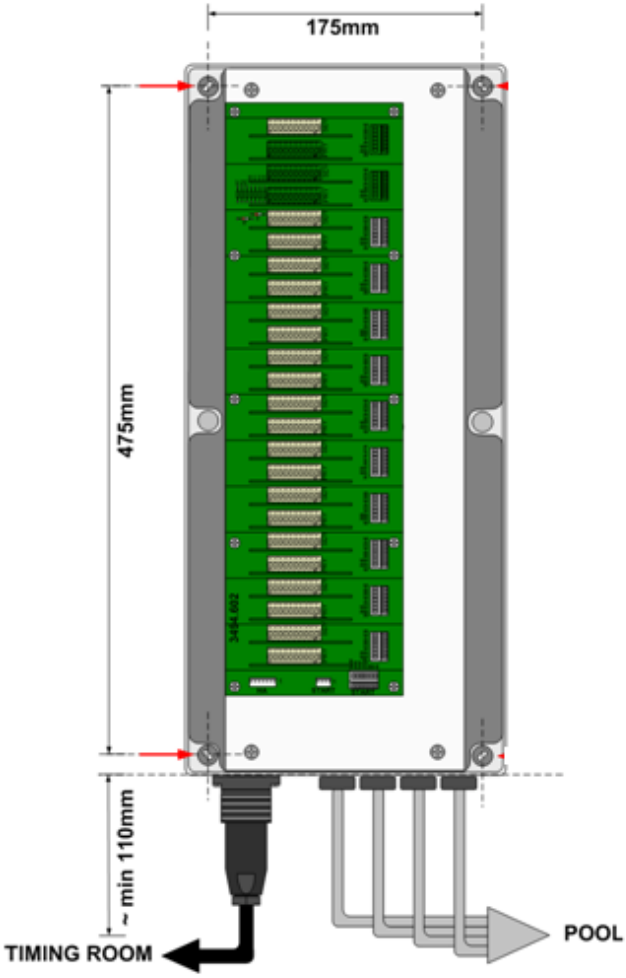

ODB10-SW without cover

DON'T FORGET TO LEAVE AT LEAST 110MM SPACE UNDER THE ODB10-SW

3.3.2 Deck plate

The Deck Plate is installed flush with the pool tiling and interfaces with previously installed conduit and junction boxes. The Deck Plates allow connection of a primary and secondary timing system, i.e. touch pads, false start control platform for relay races, 3 manual pushbuttons and loudspeakers.

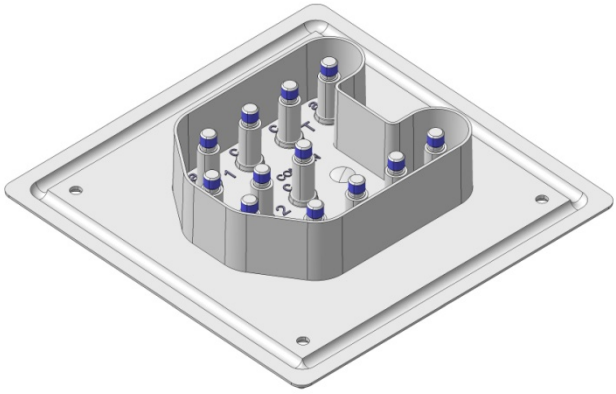

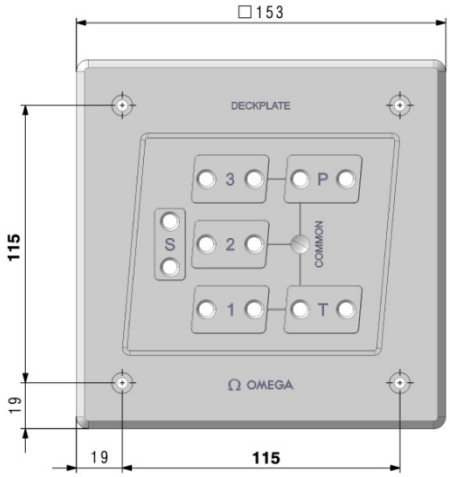

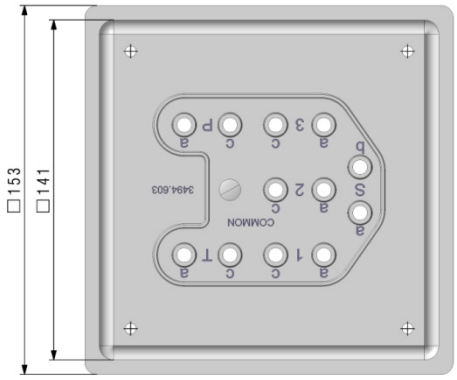

Installing the Deck Plates

The cable duct must measure a minimum of 75mm in diameter so as to be able to accommodate 20 cables of 6.3mm extern diameter and 4 cables 4 x 0.5mm^2. Difficulties can arise with the last duct, leading to the timing room, if the pool has 10 waterlanes, two Finish electronics and the cable diameter borders on the upper limit.
It is not always possible to have a water outlet, but where possible this augments reliability of the wiring. The basic deck plate 3493.603 is used like lane deck plate or start deck plate.

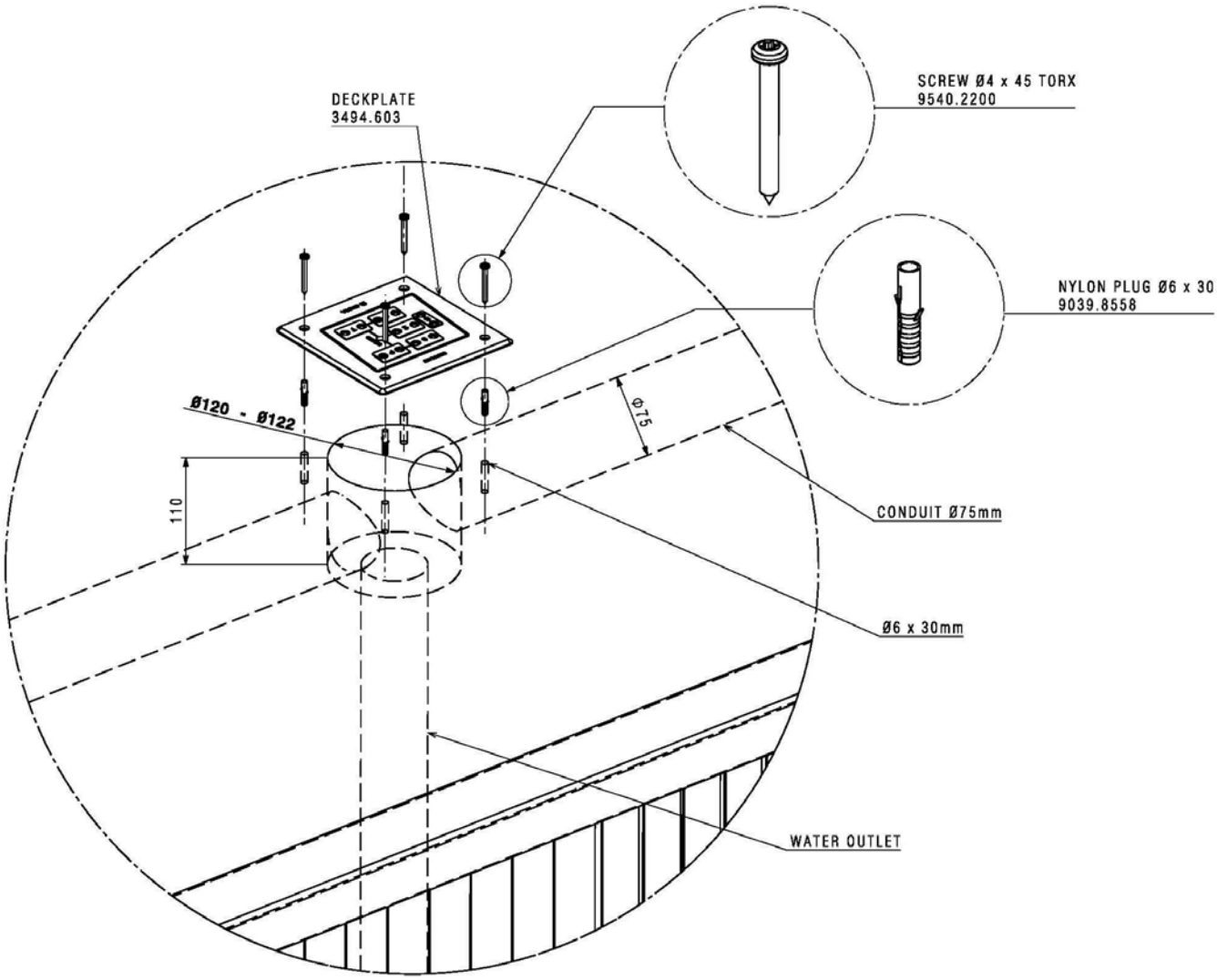

Deck Plate Protection

To protect contacts and wiring against the corrosive nature of the pool water, the following steps must be taken:

1. Fill the cavity round the soldered points and connections with a “potting” resin. This method is more rigid and more waterproof than the use of grease. Ensure a sufficient reserve of cable is left for servicing, as it will not be possible to dissolve the resin

2. Waterproof the deck plate at floor level by means of a "bead" of silicone fitted round the throat of the deck plate.

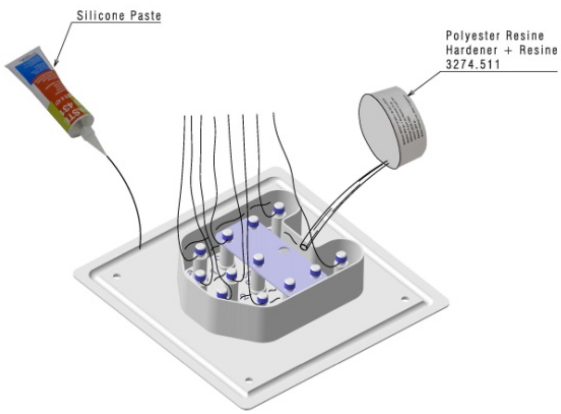

3. **Make sure a layer of insulating silicone grease permanently protects all external contacts. This will be evacuated every time a plug is inserted, so that the grease has to be re-applied after each competition.**

4. Make sure all contacts and internal soldered points are kept permanently protected by a good layer of silicon grease

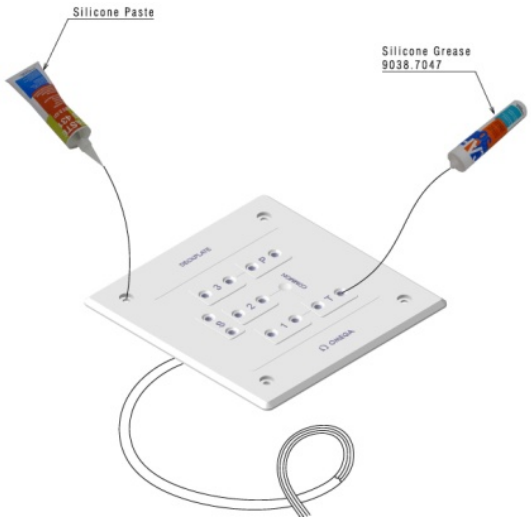

3.3.3 Deckplate adapter

Deck plate adapter allows connecting StartTime (Start & Loudspeakers) through Tuchel connectors and is mounted on start deck plate

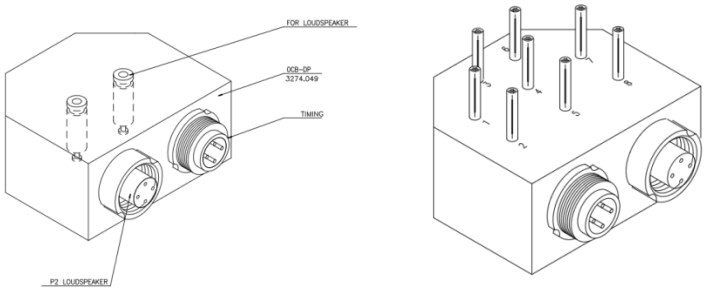

3.3.4 Wall socket

For the distribution of certain signals to the pools, it is possible to use the apparent wall sockets made in aluminium melting.
There are two different models: one model with one plug (on the left) and another model with two plugs (on the right):

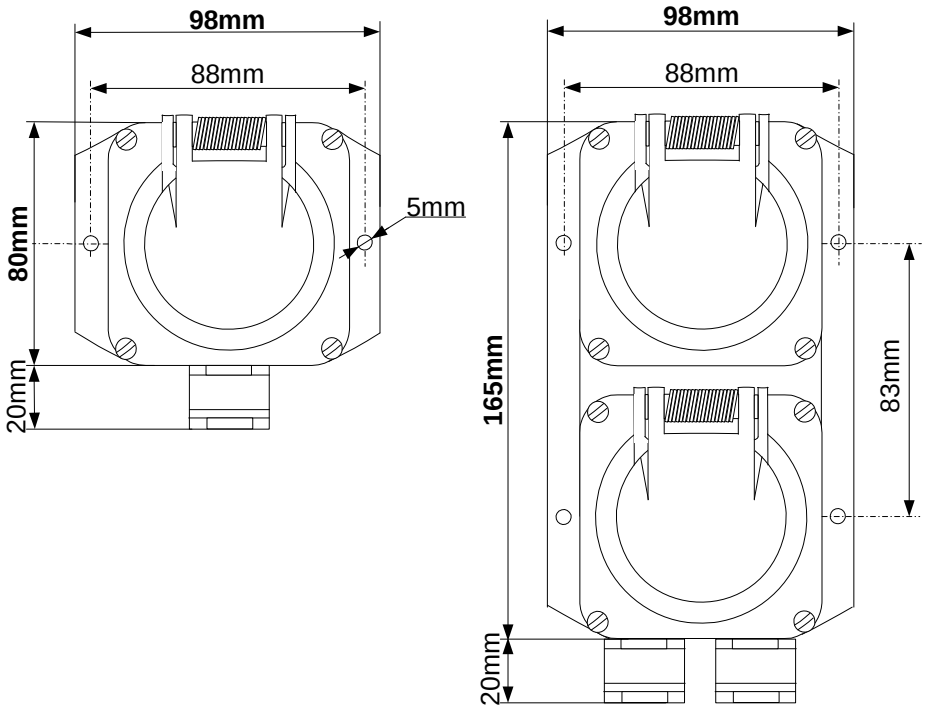

3.4 Mobile cabling

3.4.1 StartTime

376 x 215 x 245mm
w/o Connectors

280 x 35 x 140mm
+ 7 meter cable

118 x 25 x 80 mm
+ 7 meter cable

3.4.2 External loudspeaker

wx**h**x**d** :180 x 215 x 192mm

3.4.3 Harness

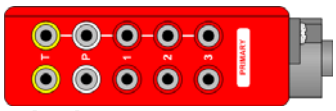

wx**h**x**d** :125 x 35 x 105mm
+ 3 meter cable

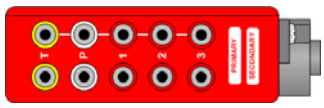

wx**h**x**d** :125 x 35 x 105mm
+ 3 meter cable

3.5 Displays

3.5.1 Calypso

It is possible to mount the boards either horizontally or vertically. The supports are delivered as an extra depending on the required type of mounting The scoreboard is designed to be installed against a wall. Easy front access for maintenance and cleaning is allowed.

	1L
Width (mm)	2400
Height (mm)	340
Depth (mm)	94

HORIZONTAL 4-10 Lines

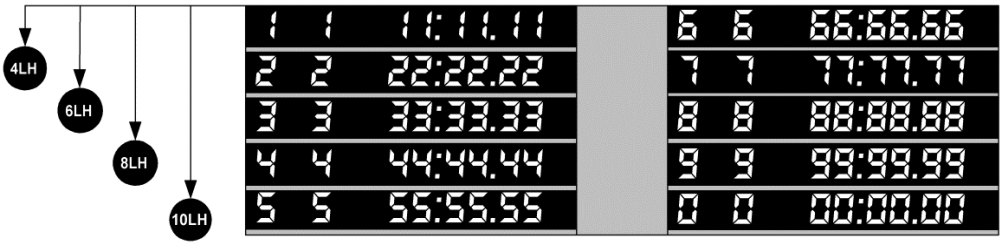

	4LH	6LH	8LH	10LH
Width (mm)	5480			
Height (mm)	680	1020	1360	1700
Depth (mm)	94			

VERTICAL 4-10 Lines

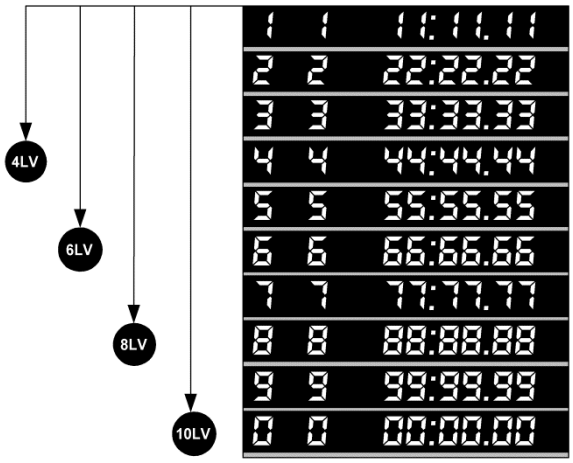

	1LV	4LV	6LV	8LV	10LV
Width (mm)	2400				
Height (mm)	340	1360	2040	2720	3400
Depth (mm)	94				

3.5.2 Piccolo

The Piccolo is a 96 alphanumeric scoreboard that uses LED technology. All the dots are white.

Beside the leading LED white technology, each 10 cm digit consists of 40 LED's for optimal contrast and crystal clear display up to 50 meters.

The display brightness is done automatically by default adapted to the surrounding light through an integrated sensor.

The compact grey aluminium housing has an acrylic finish to guarantee the best protection against the elements.

The scoreboard is designed to be installed against a wall. Easy front access for maintenance and cleaning is allowed.

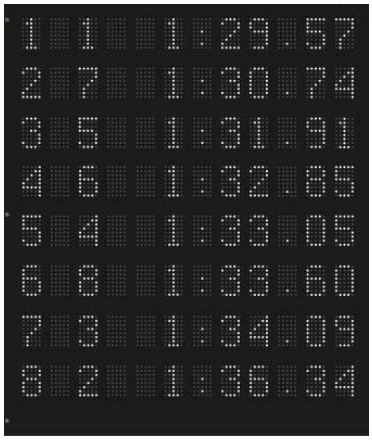

wx**h**x**d** :1150 x 1360 x 90 mm

4 GENERAL CABLING

4.1 Fix cabling

The connection of deckplates to the central connection box ODB10-SW, which is equipped with 1 to 4 electronic racks (Set of harness HA1-PRY, HA1-SDY, HA2-PRY and HA2-SDY), depends on the degree of complexity of the installation.

4.1.1 ODB10-SW (PRY) or (PRY & SDY) with 1x cable / deck plate

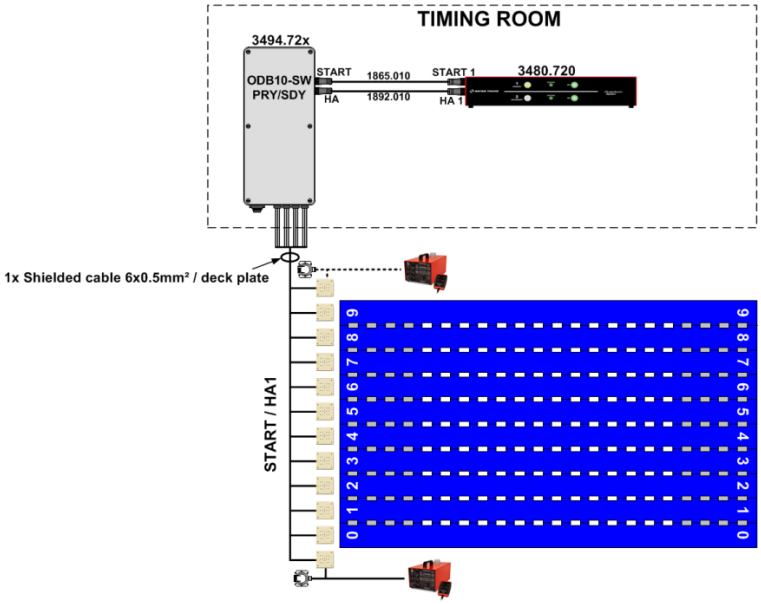

Figure 9 – ODB10 (PRY) or (PRY & SDY) with 1x cable / deck plate

4.1.2 ODB10-SW (PRY & SDY) with 1x cable / deck plate

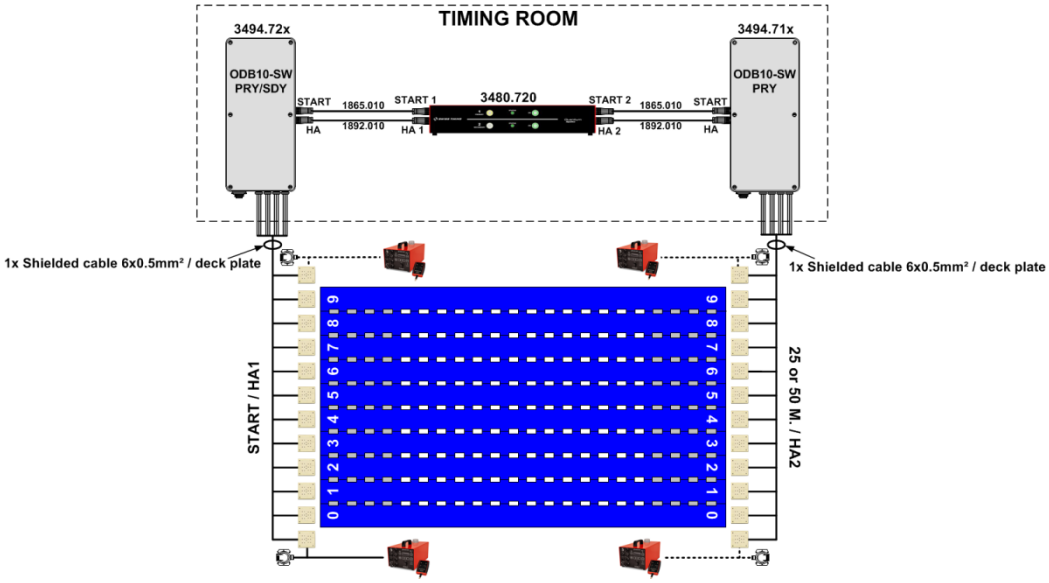

Figure 10 – ODB10 (PRY & SDY) with 1x cable / deck plate

4.1.3 Fixed wiring Swimming Level 1 (Finish PRY)

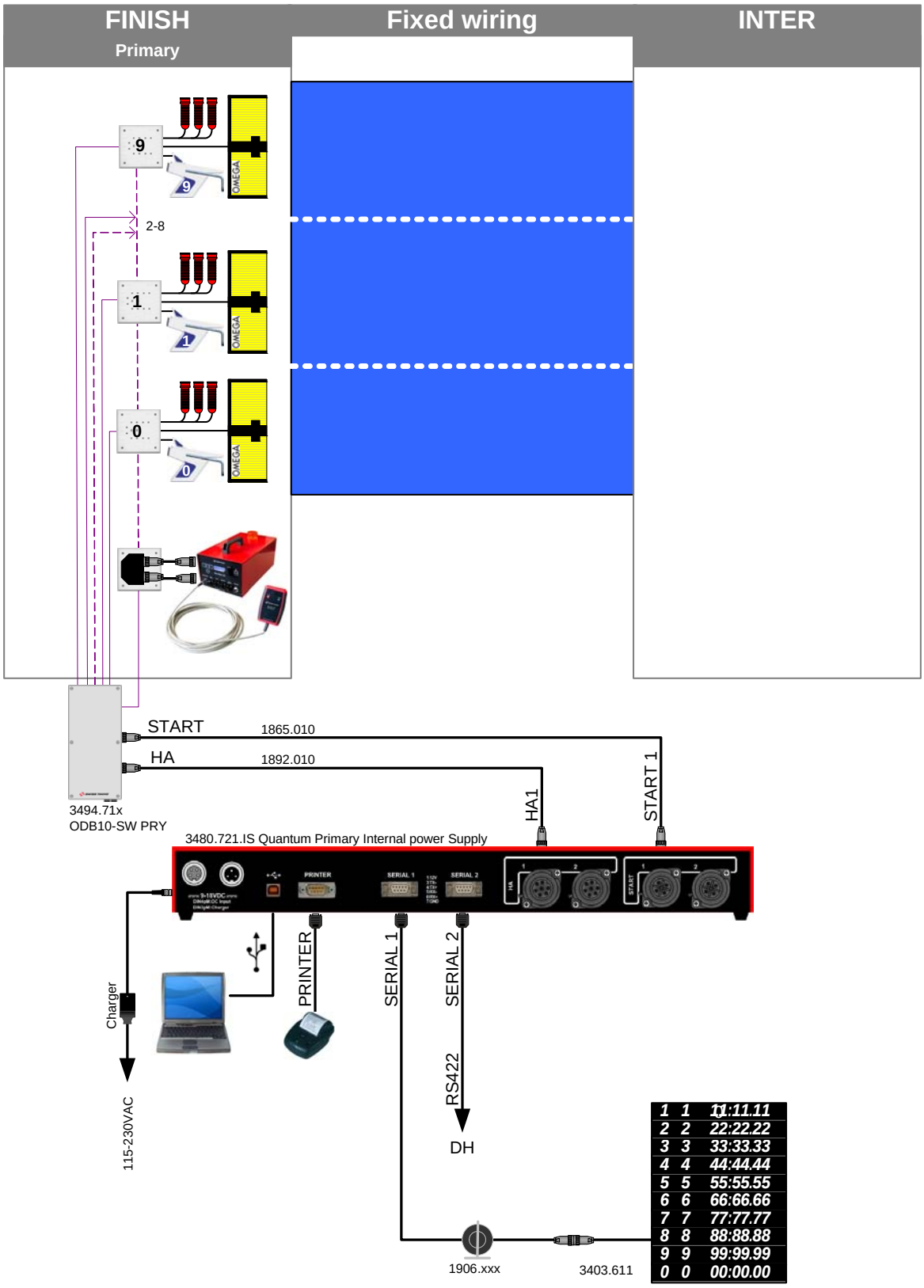

Figure 11 - Fixed wiring Swimming level 1

4.1.4 Fixed wiring Swimming Level 2 (Finish PRY / Inter PRY)

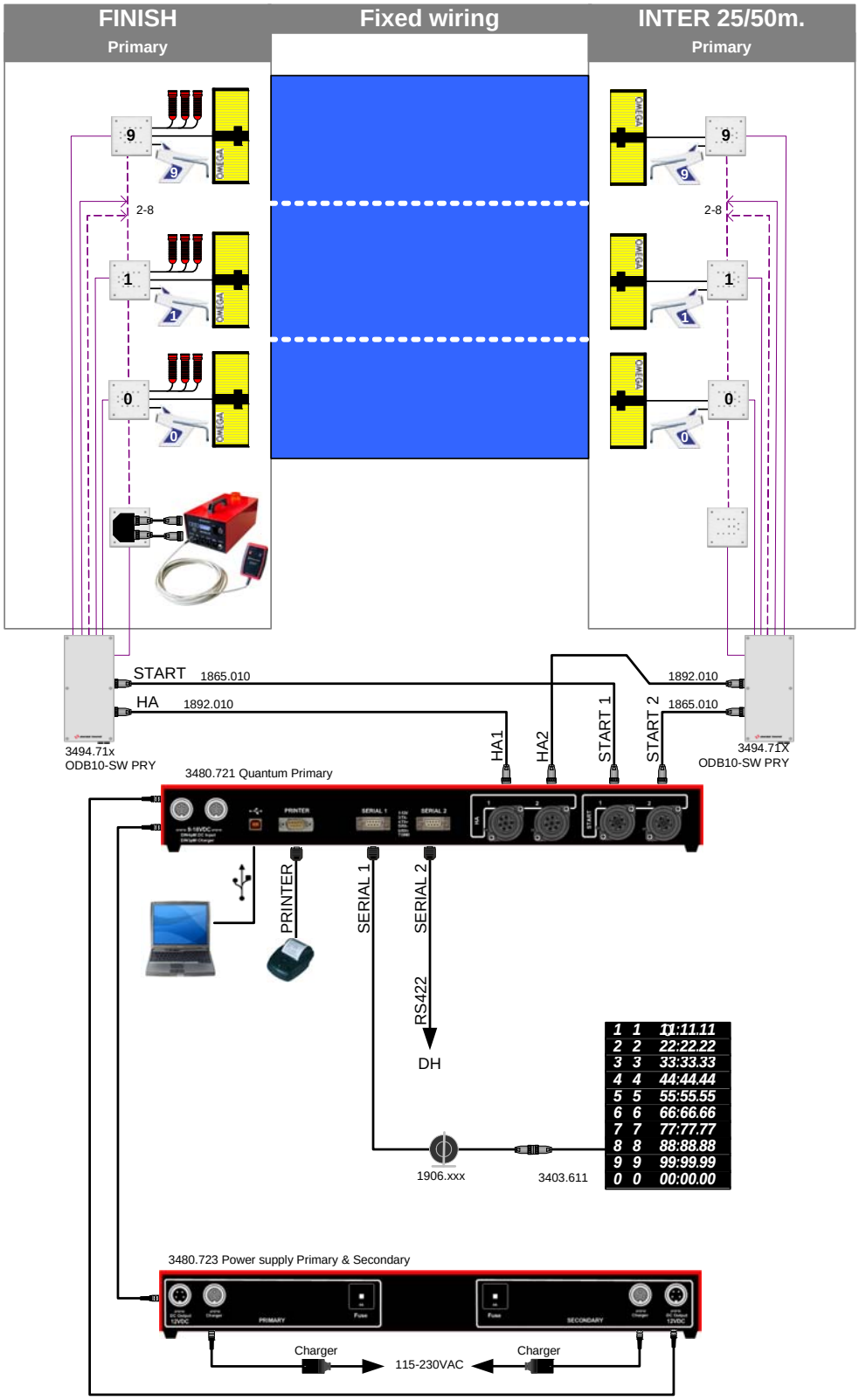

Figure 12 - Fixed wiring Swimming level 2

4.1.5 Fixed wiring Swimming Level 3 (Finish PRY & SDY / Inter PRY)

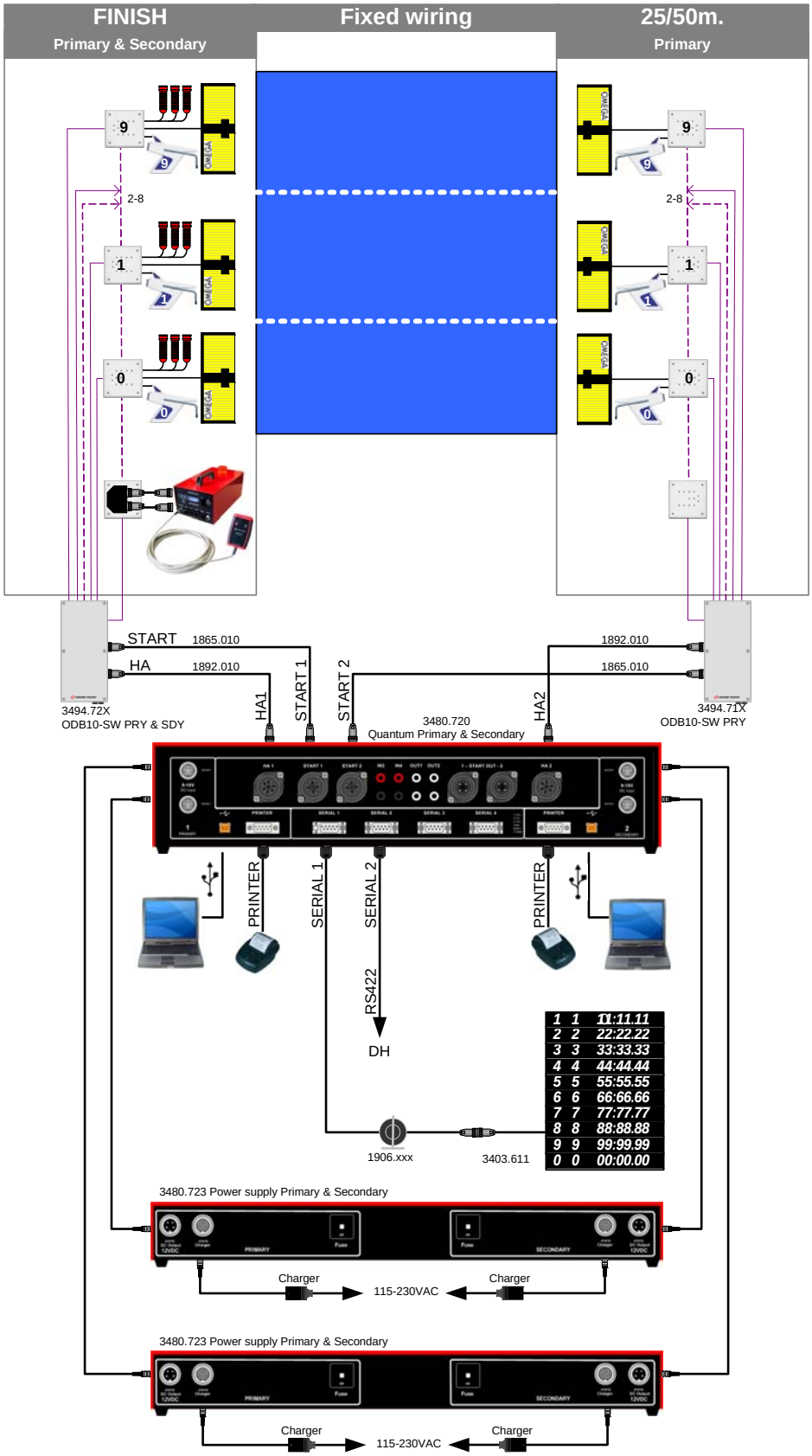

Figure 13 - Fixed wiring Swimming level 3

4.1.6 Fixed wiring Swimming Level 4 (Finish PRY & SDY / Inter PRY & SDY)

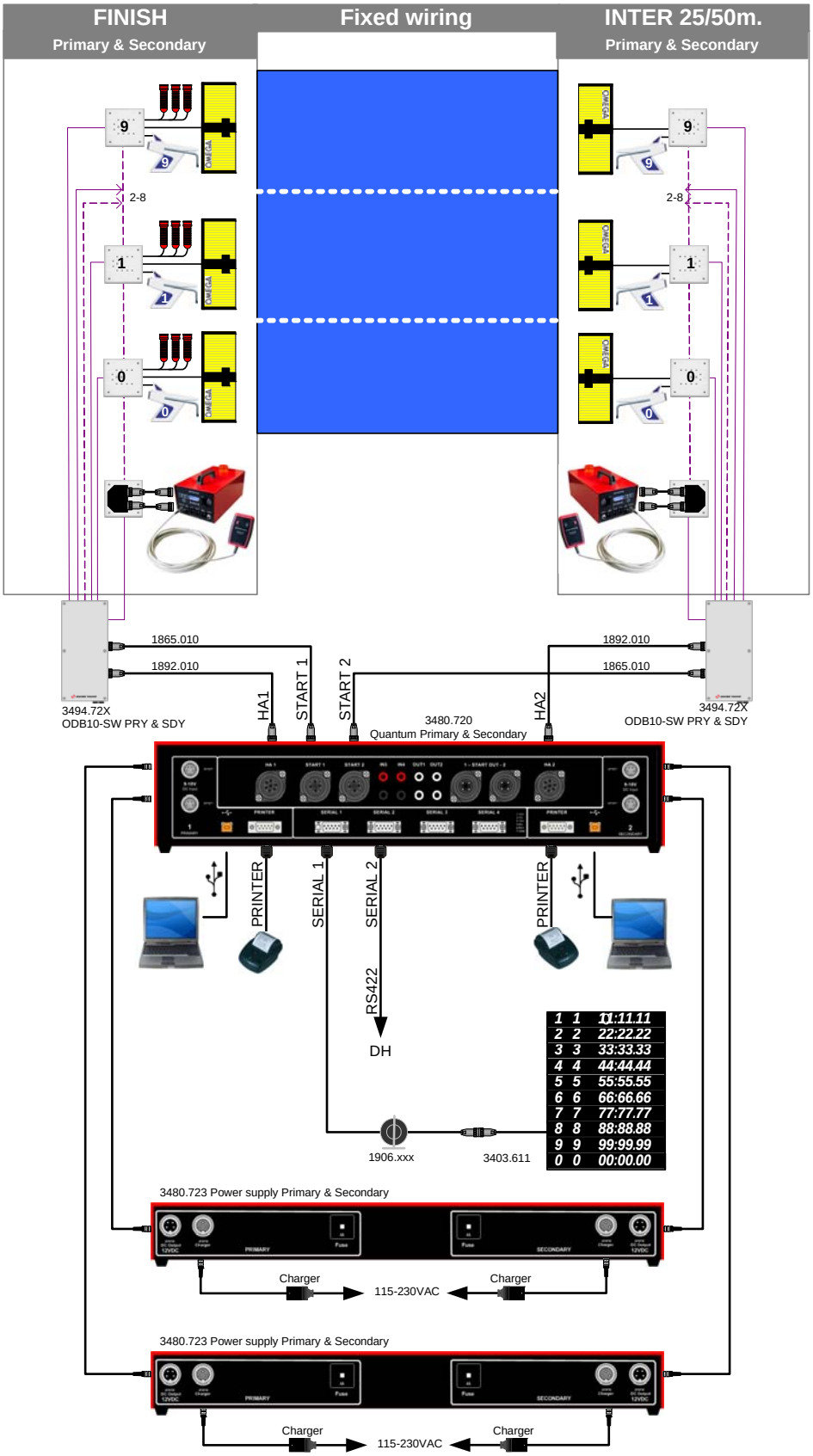

Figure 14 - Fixed wiring Swimming level 4

4.1.7 Loudspeaker cable

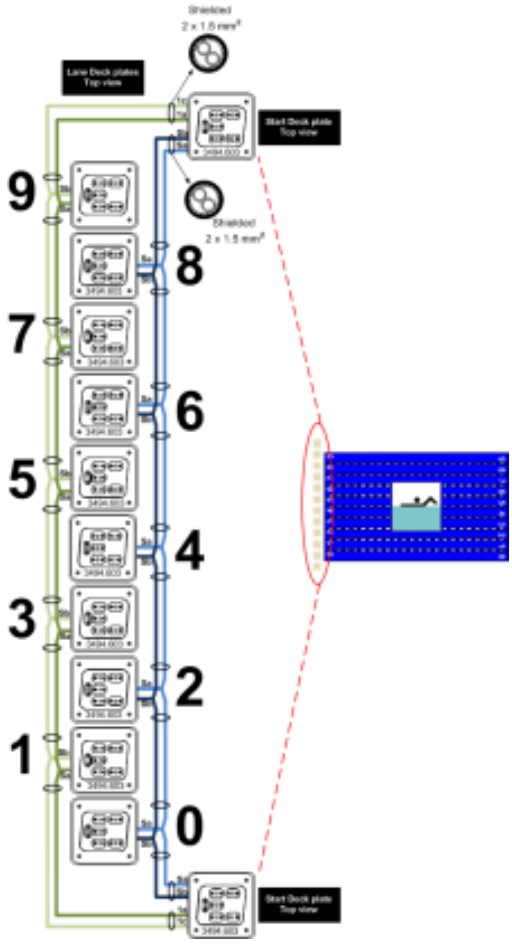

4.1.8 Start cable

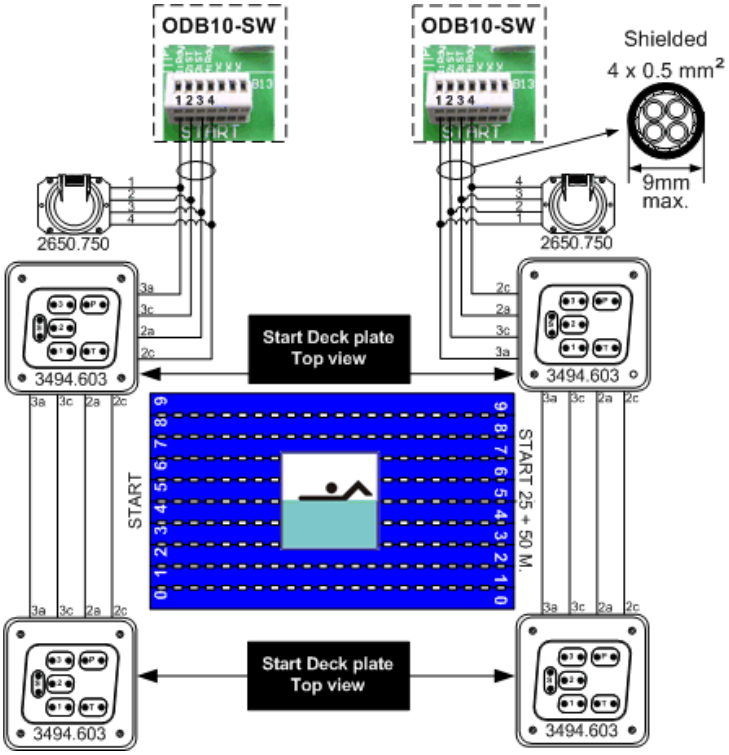

4.2 Mobile cabling

4.2.1 Mobile Swimming Level 1 (Finish PRY)

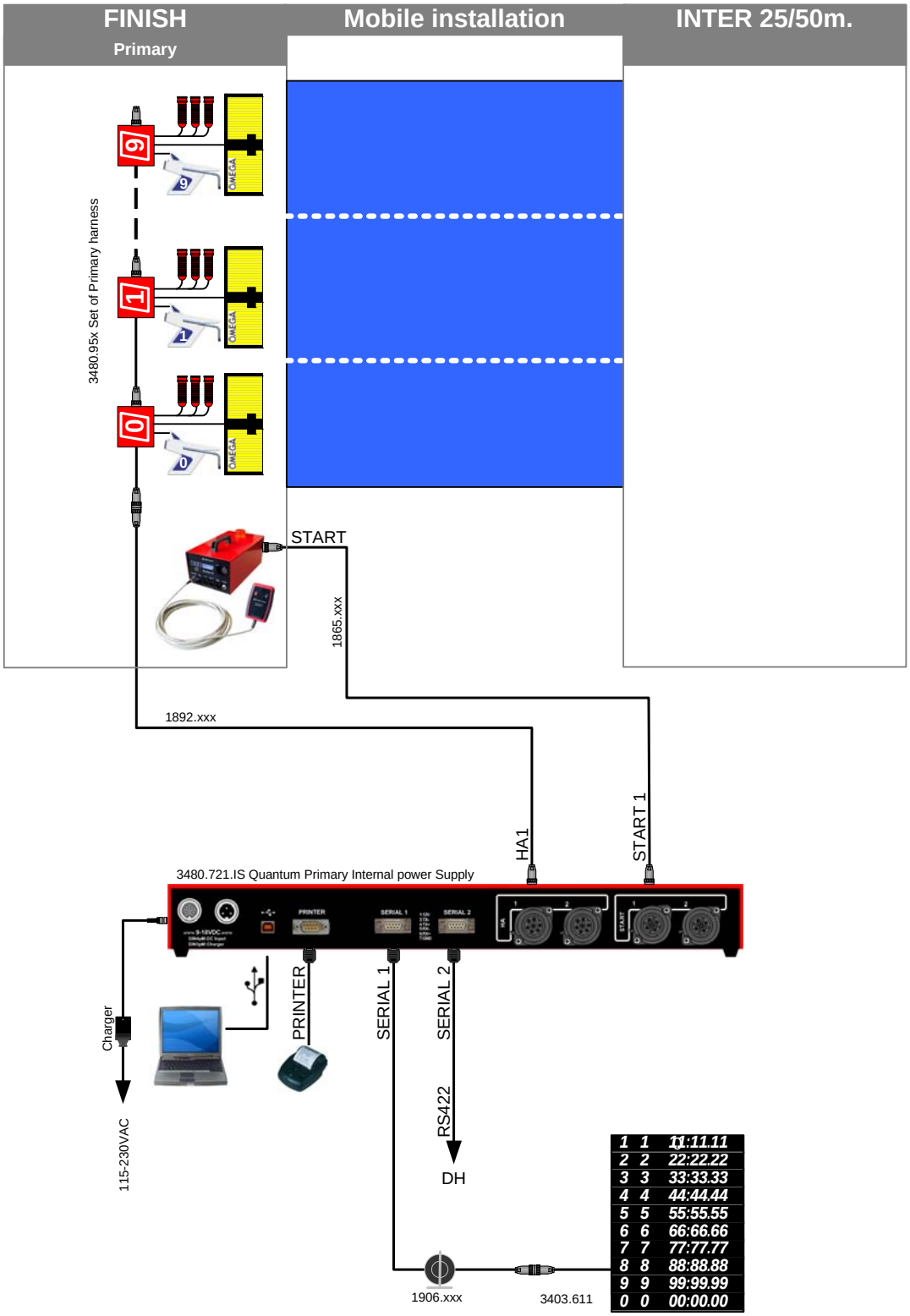

Figure 15 - Mobile swimming level 1

4.2.2 Mobile Swimming Level 2 (Finish PRY / Inter PRY)

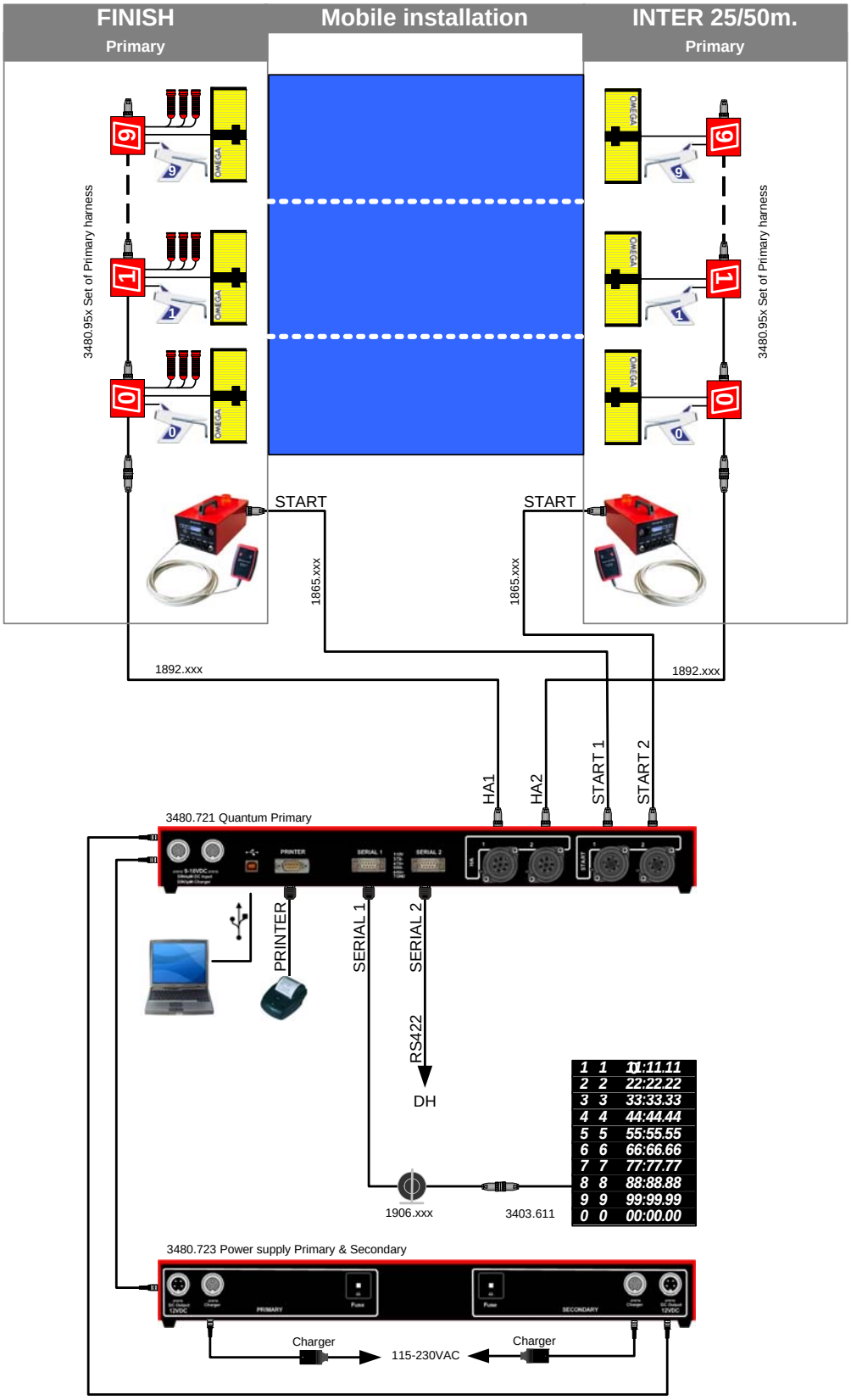

Figure 16 - Mobile swimming level 2

4.2.3 Mobile Swimming Level 3 (Finish PRY & SDY / Inter PRY)

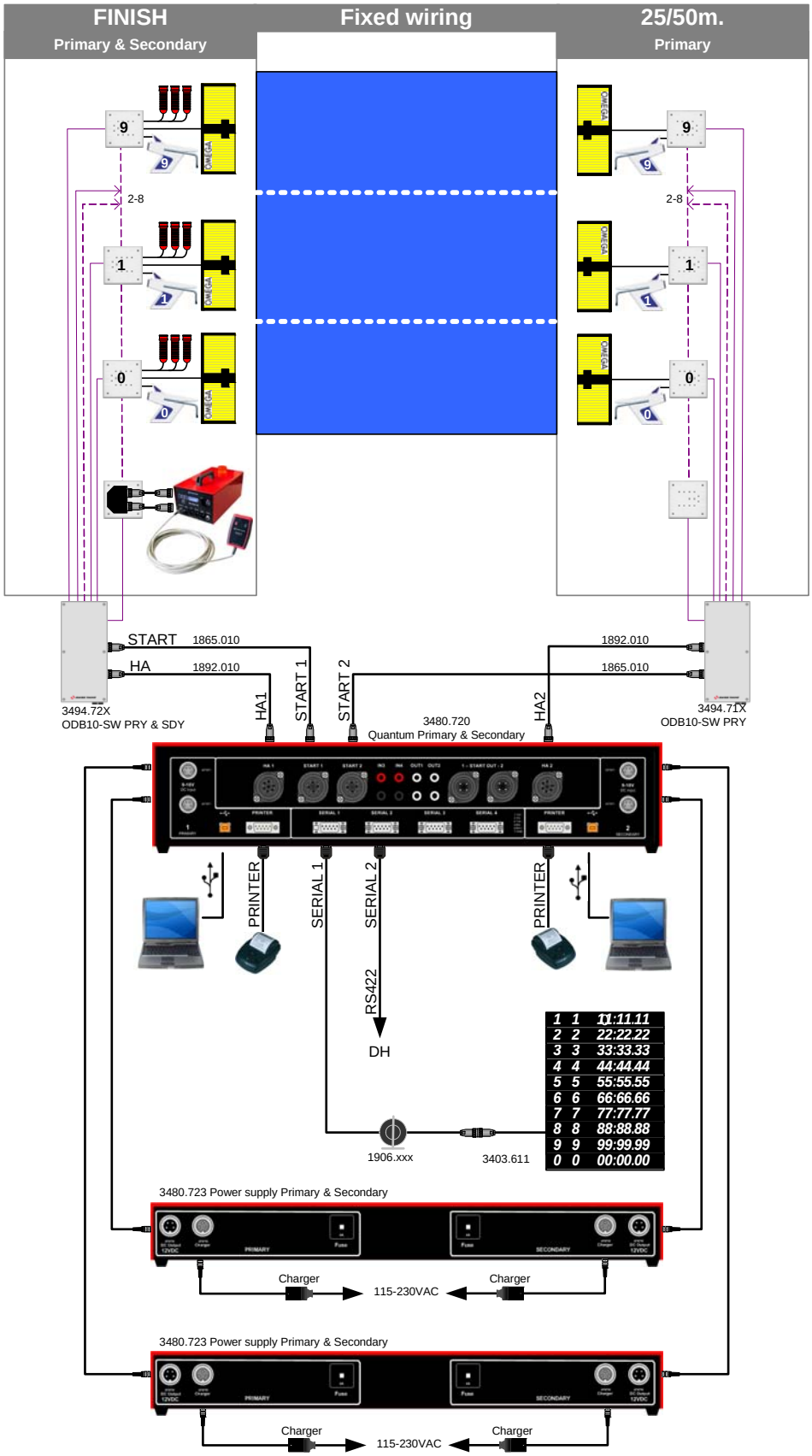

Figure 17 - Mobile swimming level 3

4.2.4 Mobile Swimming Level 4 (Finish PRY & SDY / Inter PRY & SDY)

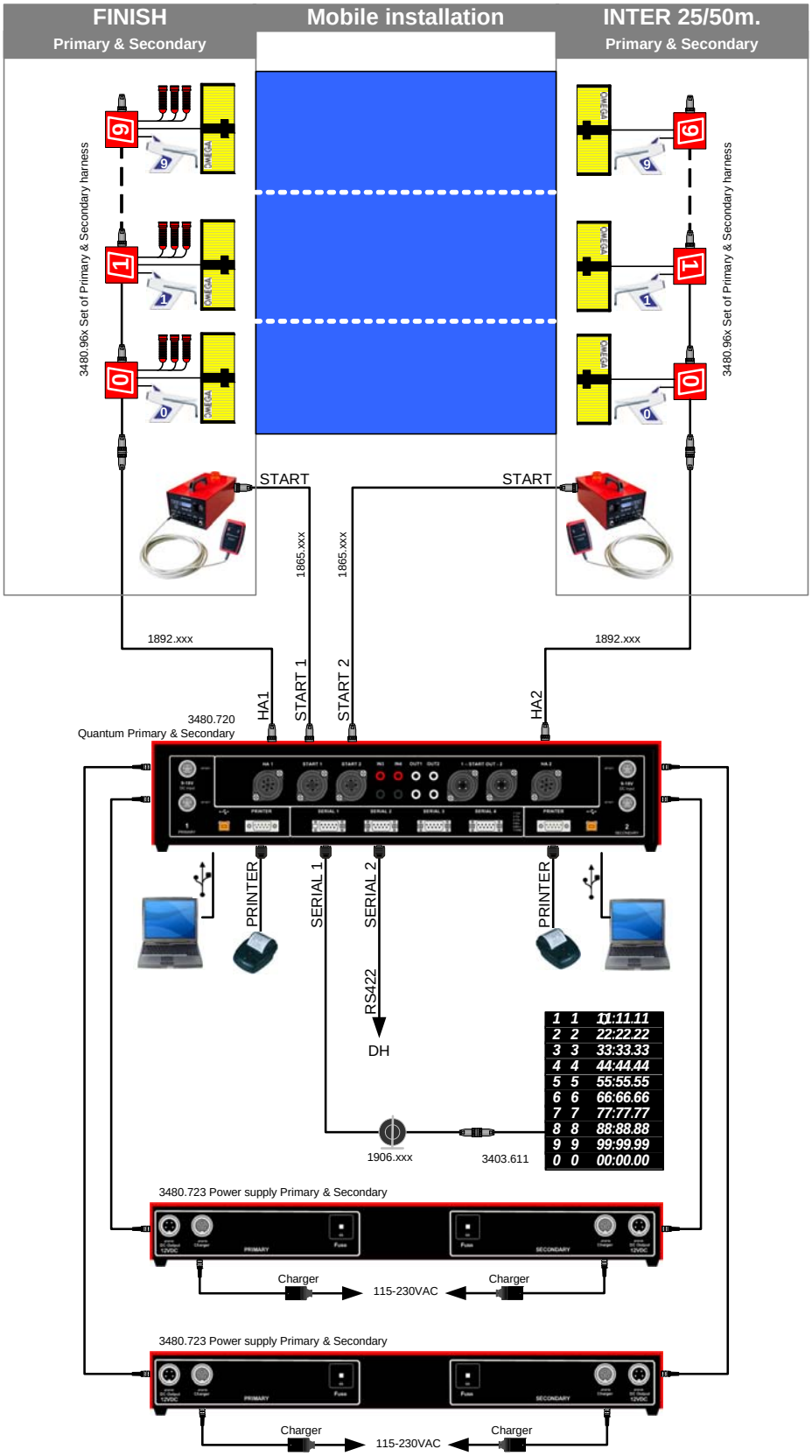

Figure 18 - Mobile swimming level 4

4.3 Displays Wiring

The cables for scoreboard control **must not be laid in the same duct as timing information cables** (touchpads etc.).

The scoreboard cable should be shielded and for installations where the scoreboard is located more than 50 meters from the Quantum unit, the cable should be twisted as well.

According to circumstances, screening can be connected either to the scoreboard or to the ODB10-SW connection box, but never to the two extremities at once.

The cable for a numeric or alphanumeric display is made up of 2x2x0.25mm^2 twisted pairs shielded, diameter 0.8mm (20 AWG).

For a matrix display board, the scoreboard cable is made up of 20x2x0.25mm^2 twisted pairs shielded (20 AWG). In the timing room this cable is connected to a specific ODB dedicated to the display system

Consumption of a Calypso board:

1 line	90 VA
4 lines	360 VA
8 lines	720 VA
10 lines	900 VA

5 APPENDIX

5.1 Version history

Version	Date	Modifications since last version
4.0	15.07.2013	Quantum SW
4.1	03.04.2014	Additional fix cabling ducts

NOTES

SWISS TIMING LTD
A COMPANY OF THE SWATCH GROUP

P.O. Box 138, rue de l'Envers 1
2606 Corgémont
Switzerland

Phone +41 32 488 36 11
www.swisstiming.com
info@swisstiming.com